DENON

Hi-Fi Component

SERVICE MANUAL

MODEL DN-2100F

DOUBLE CD PLAYER

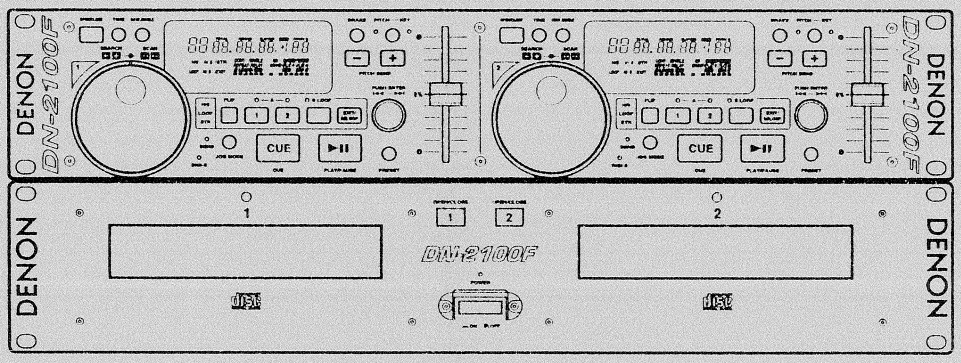

— TABLE OF CONTENTS —

SAFETY PRECAUTIONS 2
SPECIFICATIONS 2
DISASSEMBLY ..... 3~5
CONFIRMING THE SERVO ..... 6~9
MECHA-μCOM VERSION UP 10
SEMICONDUCTORS ..... 11~19
PRINTED WIRING BOARD ..... 20~25
NOTE FOR PARTS LIST 26
PARTS LIST OF P.W.B. UNIT ASS'Y ..... 26~33
PARTS LIST OF RC-48 REMOTE CONTROL UNIT 34
EXPLODED VIEW OF RC-48 REMOTE CONTROL UNIT 35
EXPLODED VIEW OF CHASSIS AND CABINET 36
PARTS LIST OF EXPLODED VIEW 37
PARTS LIST OF CD MECHANISM UNIT (CD93F8) 38
EXPLODED VIEW OF CD MECHANISM UNIT (CD93F8) 39
PACKING VIEW 40
PARTS LIST OF PACKING & ACCESSORIES 40
BLOCK DIAGRAM 41
WIRING DIAGRAM 42
SCHEMATIC DIAGRAM ..... 43~46

- Some illustrations using in this service manual are slightly different from the actual set.

NIPPON COLUMBIA CO., LTD.

SAFETY PRECAUTIONS

The following check should be performed for the continued protection of the customer and service technician.

LEAKAGE CURRENT CHECK

Before returning the unit to the customer, make sure you make either (1) a leakage current check or (2) a line to chassis resistance check. If the leakage current exceeds 0.5 milliamps, or if the resistance from chassis to either side of the power cord is less than 460 kohms, the unit is defective.

SPECIFICATIONS

GENERAL

Type:	Twin mechanism compact disc player with wired remote control	
Disc Type:	Standard compact discs (12 cm and 8 cm discs)	
Dimensions:	Player unit:	482 (W) × 88 (H) × 252 (D) mm (without feet) 18-31/32″ (W) × 3-15/32″ (H) × 9-59/64″ (D)
	Remote control unit:	482 (W) × 88 (H) × 62 (D) mm (without feet) 18-31/32″ (W) × 3-15/32″ (H) × 2-7/16″ (D)
Installation:	19-inch rack mountable	
	Player unit:	2U
	Remote control unit:	2U
	Player unit:	6 kg (13.23 ibs.)
	Remote control unit:	1.5 kg (6.614 lbs.)
Power Supply:	U.S.A. & Canada model:	120 V AC ±10 %, 60 Hz
	Europe & U.K. model:	230 V AC ±10 %, 50 Hz
Power Consumption:	21 W	
Environmental Conditions:	Operational temperature:	5 to 35 °C (41 to 95 °F)
	Operational humidity:	25 to 85 % (no condensation)
	Storage temperature:	-20 to 60 °C (4 to 140 °F)

AUDIO SECTION

Quantization:	16-bit linear per channel
Sampling Frequency:	44.1 kHz at normal pitch
Oversampling Rate:	8 times
Frequency response:	20 to 20,000 Hz
Analog output	
Output Level:	2.0 V
Digital Output:	
Signal Format:	SPDIF
Output Level:	0.5 Vp-p 75 Ω/ohms
Load impedone:	10 kΩ/kohms or more

FUNCTIONS

Instant Start:	Within 20 msec.	
Variable Pitch:	10 % range:	±10 % or more
	16 % range:	±16 % or more
Pitch Bend:	±18 % or more	
Search Precision:	1/75 sec (1 subcode frame)	
Max. Scan Speed:	Over 20 times normal speed	

DISASSEMBLY

(Follow the procedure below in reverse order when reassembling)

Top Cover

1. Remove 4 screws ① on both sides, and 2 screws ②.
2. Pull up Top Cover.

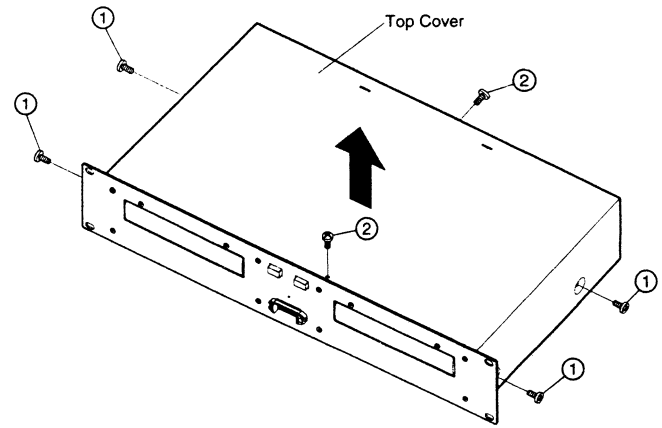

Front Panel

1. Detach 2 Blind Labels on the bottom chassis.
2. Move CD Mecha Rack in the arrow direction through the label detached chassis opening. Loader Frame comes out.
3. Pull up Loader Panel while pulling it towards front.
4. Remove 2 upper screws ③ and 3 lower screws ④, and 2 screws ⑤ on both sides.
5. Detach Front Panel.

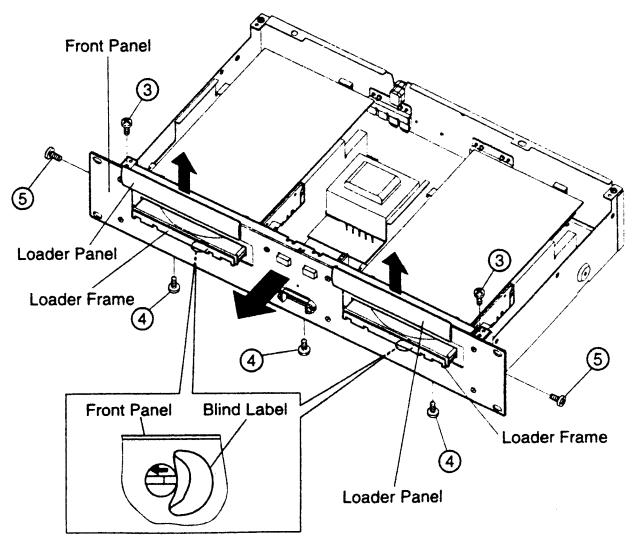

Mechanism Unit

1. Disconnect FFC cable and Connector.
2. Remove 8 screw ⑥.

Notes:
- Do not pull out aslant to prevent the FFC cable from damage.
- Do not fail to pull out AC cord from wall outlet before disconnecting the FFC cable.
  If the AC cord is remained plugged into wall outlet, the power is kept supplied in the unit, which may cause danger.

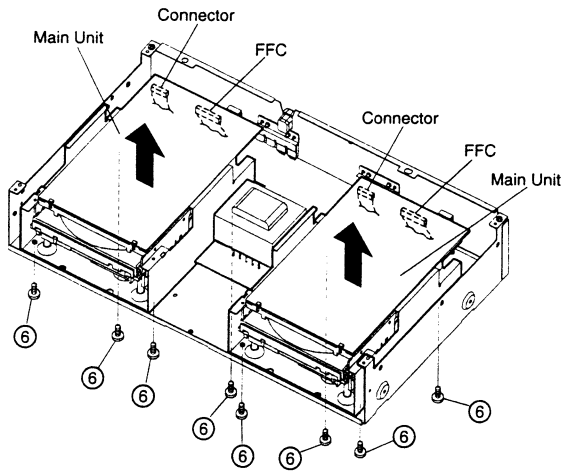

Main P.W.B.

1. Remove 4 screws ⑦.
2. Disconnect Connector.
3. Detach Main P.W.B.

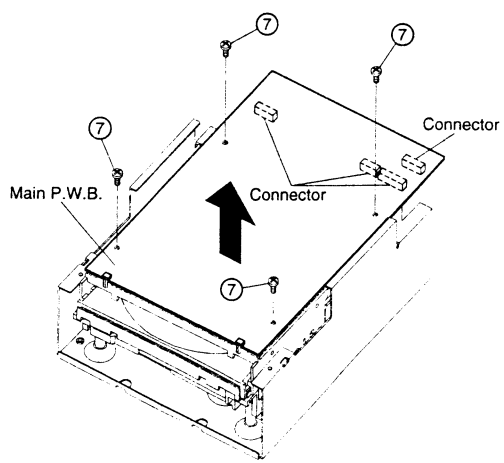

CD Mecha.

1. Remove 2 upper screws ⑧, and 2 lower screws ⑨.
2. Detach CD Mecha.

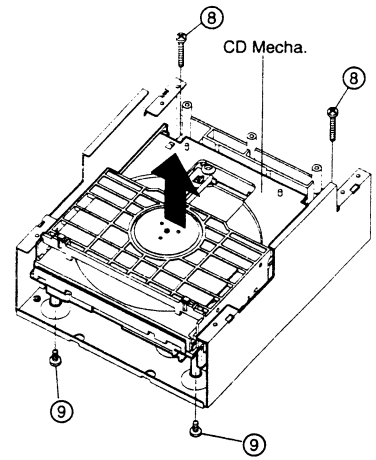

Cover (Remote Control Unit)

1. Remove 5 screws (1 × ⑩ and 4 × ⑪).

Note: Remote Control Unit and its back panel are connected with cables, so pay attention when removing the back panel.

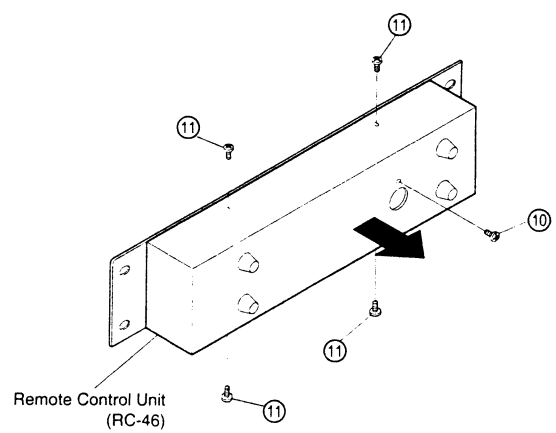

Mechanism Unit

1. Disconnect FFC cable and Connector.
2. Remove 8 screw ⑥.

Notes:
- Do not pull out aslant to prevent the FFC cable from damage.
- Do not fail to pull out AC cord from wall outlet before disconnecting the FFC cable.
  If the AC cord is remained plugged into wall outlet, the power is kept supplied in the unit, which may cause danger.

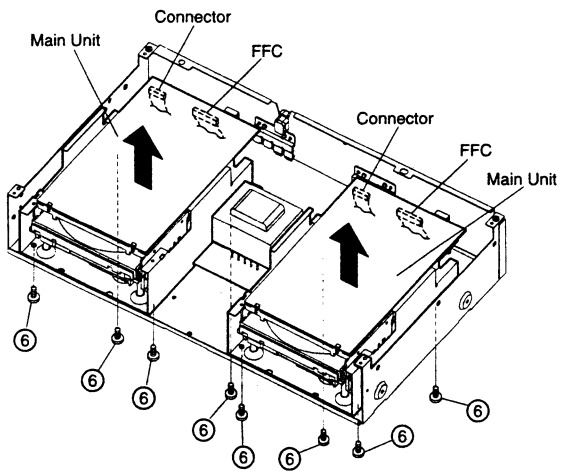

Main P.W.B.

1. Remove 4 screws ⑦.
2. Disconnect Connector.
3. Detach Main P.W.B.

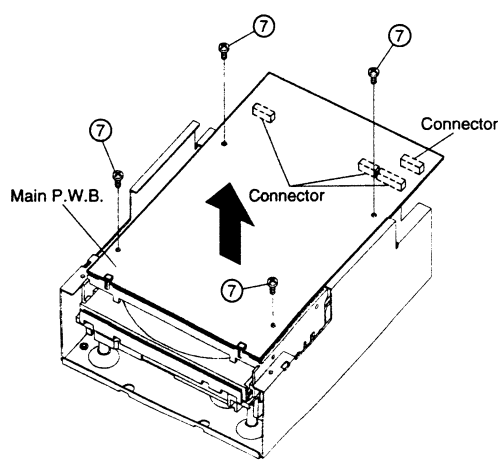

CD Mecha.

1. Remove 2 upper screws ⑧, and 2 lower screws ⑨.
2. Detach CD Mecha.

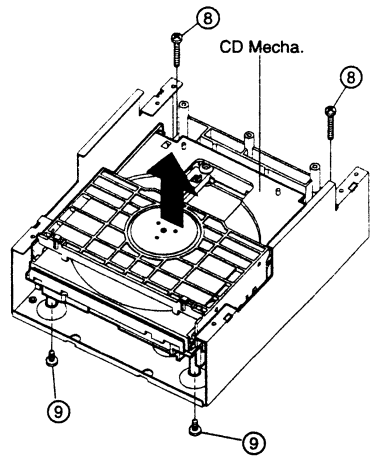

Cover (Remote Control Unit)

1. Remove 5 screws (1 × ⑩ and 4 × ⑪).

Note: Remote Control Unit and its back panel are connected with cables, so pay attention when removing the back panel.

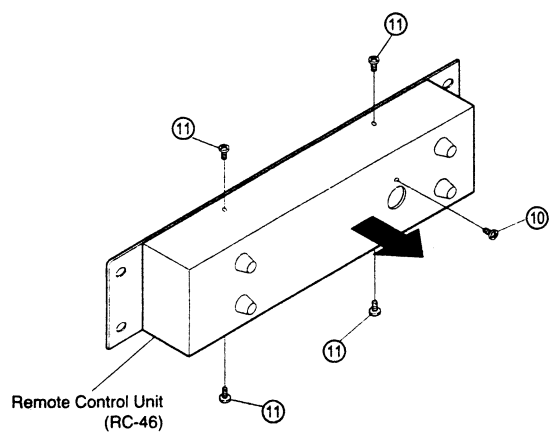

CONFIRMING THE SERVO

CAUTION:
The Optical Pick-up used for CD player may invite defection by an external noise, such as electrostatic, etc., please pay the following attention.
1. Use a conductive mat on a working table to avoid electrostatic charge.
2. A working personnel should use a wrist strap to ground human body.
3. Tools, etc., specially for a soldering iron must use with its tip grounded to prevent leakage of electricity.
Utmost care must be taken to your clothes for electrostatic charging in a low humidity environment.

Required Measuring Implement

1. Dual trace oscilloscope
2. Reference disc (TCD784 or CO-74176)

1. What is Service Program

Service program is a special program intended for confirming servo functions etc.

2. Actuating the Service Program and Servo Confirming Method

1. Turn the power switch off.
2. While pushing the CD1's PITCH BEND + button and CD2's OPEN/CLOSE button simultaneously, turn the power on.
3. µcom GEN No. appear as follows, RC µcom GEN No. → Track & Min, Mecha. µcom GEN No. → Sec & Frm.
4. Turn SELECT knob clockwise. The display shows "01". At this mode, each pressing of the SELECT knob opens or closes the tray.
5. Set the reference disc (TCD784 or CO-74176) while the tray is open.
6. Turn SELECT knob clockwise again. The display shows "02".
   At this mode, tracking error signal can be observed with connection below (Fig1).
   To start measuring, press the SELECT knob.
7. Turn SELECT knob clockwise again. The display shows "03".
   At this mode, HF signal can be observed with connection below (Fig2).
   To start measuring, press the SELECT knob.
8. Turn SELECT knob clockwise again. The display shows "04".
   At this mode, servo automatic adjustment data can be called using JOG dial. (see Table below)
   To start adjustment, press the SELECT knob.

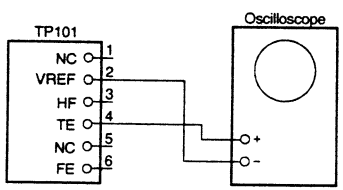

Fig1

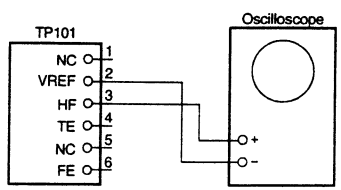

Fig2

	Adjustment Item	Adjustment Value indication at character portions.
1	Focus Gain	FOG 50 ~ 804
2	Focus Balance	FBAL –125 ~ 125
3	Focus Offset	FOFS –35 ~ 35
4	Tracking Gain	TrG 102 ~ 645
5	Tracking Balance	TBAL –110 ~ 86
6	Tracking Offset	TOFS –15 ~ 15

* When adjustment range exceeds, replace pick-up.

3. Contents of Service Program

Switch on the power while pushing the CD1's PITCH BEND + button and CD2's OPEN/CLOSE button at the same time. After actuating the servo program, select an aiming process number with the SELECT knob, FLIP button, A1 button, or A2 button. Press the SELECT knob to execute the selected process, the process number is then displayed on the track indicator of the display. To exit from the service program, just switch off the power.

	Process No. (TRACK Indication)	Function	Contents
SELECT knob	01	OPEN/CLOSE	Performs open/close each time when the SELECT knob is pushed.
	02	Tracking Error	Check tracking error signal, then performs the Automatic Adjustment.
	03	HF Signal	Check HF signal.
	04	Automatic Adjustment call	Turn the JOG dial to display the Automatic Adjustment data.
	05	Cleaning of Pick-up Lens	Press SELECT knob. ("PU. Clean" is displayed.) Pick-up moves outward, and cleaning of the pick-up lens possible.
	06	Focus Gain Changing	Select Gain with JOG dial. Press SELECT knob, the display lights that will be newly memorized in EEPROM. Selectable level appears on the indicator MIN, while current Focus Gain level appears on the SEC. When select data becomes big or small, the Gain is up or down. In normal, do not change the data that is set by 4. The set No. stored in the EEPROM:
	07	Tracking Gain Changing	Select Gain with JOG dial. Press SELECT knob, the display lights that will be newly memorized in EEPROM. Selectable level appears on the indicator MIN, while current Tracking Gain level appears on the SEC. When select data becomes big or small, the Gain is up or down. In normal, do not change the data that is set by 2. When sound out is occurred by oscillation, please raise the Gain. But there is sound out easily by defective disc. The set No. stored in the EEPROM:
	08	Error Code Check	Turn the JOG dial to display the logging error codes in the occurred order. ("Error Data" is displayed.) 10 error logs are memorized at maximum. Kinds of Error Code, displayed (1) Error Code Table (Appears only at Heat Run and Chucking Test function) (2) E204 ····· Servo down during cue (3) E205 ····· Servo down during pause (4) E206 ····· Servo down during manual search and scan (5) E213 ····· Unable to read the subcode during cue (6) E214 ····· Unable to read the subcode during pause (7) E215 ····· Unable to read the subcode during the manual serach and scan Pressing SELECT knob enters to data erase mode. ("dAtAClr" is displayed.) If the SELECT knob is pushed again, the memorized error data are cleared.
	09	Total Running Time	Total time span of servo function that counted by the hour is displayed. The display time is less than 65535 hours. Note: No time is counted if powered down within 59 minutes. Pressing SELECT knob enters to data erase mode. ("dAtAClr" is displayed.) If the SELECT knob is pushed again, the memorized time data are cleared.

	Process No. (TRACK Indication)	Function	Contents
FLIP button	H1	Heat Run	Starting with the PLAY/PAUSE button, it repeats open/close of the tray and playback. All tracks are played back if the track count is less than 20. Only the first and last tracks are played back if the tracks are more than 21. When any errors, it stops and indicates error code (see Error Code Table).
A1 button	H2	Chucking Test	Starting with the PLAY/PAUSE button, it repeats open/close of the tray, servo on, and TOC read. The display shows the number of the tray operation. When any errors, it stops and indicates error code (see Error Code Table).
A2 button	H3	Playing Test	Selecting this mode and pushing the PLAY/PAUSE button starts 0.9 x speed playback, but with no sound. One more pushing of the PLAY/PAUSE button during playback changes it to be 1.8 × speed playback. Desired track can be selected with the SELECT knob during playback. The following are displayed on each indicators, ● TRACK: Track number ● PITCH: Playback speed 0.9 or 1.8

Error Code Table (Appears only at Heat Run and Chucking Test function)

Error Code	Contents
	Automatic Adjustment Error
E1 00	Unable to detect disc
E1 01	Unable to adjust tracking offset
E1 02	Unable to adjust focus offset
E1 03	Unable to adjust focus fine gain
E1 04	Unable to actuate focus
E1 05	Unable to actuate tracking
E1 06	Unable to adjust tracking fine gain
E2 00	Servo down during playback
E2 01	Servo down during search
E2 02	Servo down during automatic adjustment
E2 03	Servo down during TOC read
E2 10	Unable to read the subcode between 500 msec. during the playback
E2 11	Unable to read the subcode between 1 sec. during the search
E2 12	Unable to read the subcode between 500 msec. during the TOC read
E3 00	Unable to read TOC
E4 00	Unable to close the disc holder in the regular time
E4 01	Unable to open the disc holder in the regular time
E5 00	Slide error
E5 01	Slide error during search
E8 00	Unable to store consecutive data due to track jump during data memorizing in the shock-proof memory.

Detailed error can be displayed by JOG dial when error occurs.

Error indication			
TR	MIN	SEC	FRAM
Error Code	Contents No.	Accumulated number of open/close function of the tray prior to Error occures.	
Indication state when error occurs			
Fg		FG data	
Fb		FBAL data	
FF		FOFS data	
tg		TG data	
tb		TBAL data	
tF		TOFS data	

MECHA-μCOM VERSION UP

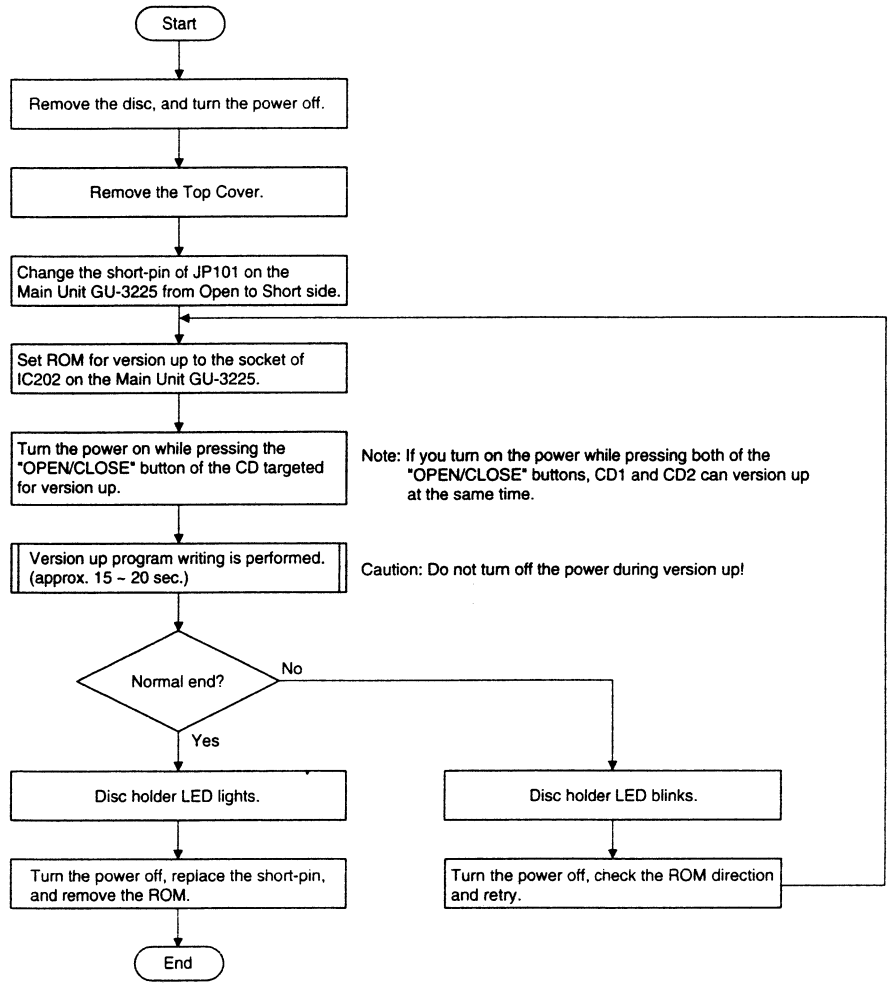

SEMICONDUCTORS

● IC's

MN102LF61GBA (Main Unit: IC201)
MECHA μCOM

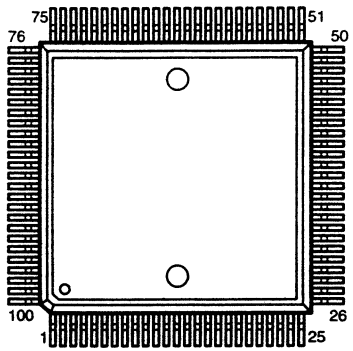

MN102LF61GBA Terminal Function

Pin No.	Pin Name	Symbol	I/O	DET	Ext	Ini	Res	Function
1	P60, WAIT	CDSEL	I	—	—	—	—	Mecha. No. select signal, L: Mecha.1, H: Mecha.2
2	RE_	RE_	O	—	—	—	—	ROM read enable output
3	WEL_	WEL_	O	—	—	—	—	Not used (open)
4	WEH_	WEH_	O	—	—	—	—	Not used (open)
5	CS0_	CS0_	O	—	—	—	—	ROM chip select
6	CS1_	CS1_	O	—	—	—	—	Not used (open)
7	CS2_	CS2_	O	—	—	—	—	Not used (open)
8	CS3_	CS3_	O	—	—	—	—	Not used (open)
9	P54	LDOUT_	I	—	Pu	—	H	Tray open complete signal
10	P55	LDIN_	I	—	Pu	—	H	Tray close complete signal
11	P56	DLOAD	I	—	Pd	—	L	ROM rewrite signal, H: Rewrite
12	WORD_	WORD	I	—	—	—	—	Fixed to 5V, H: 8-bit bus
13	A00	A00	O	—	—	—	—	Address bus 00, 1M-bit ROM connect
14	A01	A01	O	—	—	—	—	Address bus 01
15	A02	A02	O	—	—	—	—	Address bus 02
16	A03	A03	O	—	—	—	—	Address bus 03
17	VDD	VDD	—	—	—	—	—	Power (+5V)
18	SYSCLK	SYSCLK	O	—	—	—	—	System clock output (OSCI × 1/2), not used
19	Vss	Vss	—	—	—	—	—	GND (0V)
20	XI	XI	I	—	—	—	—	Fixed to GND
21	XO	XO	O	—	—	—	—	Not used (open)
22	VDD	VDD	—	—	—	—	—	Power (+5V)
23	OSCI	OSCI	I	—	—	—	—	X'tal input terminal, 20MHz
24	OSCO	OSCO	O	—	—	—	—	X'tal output terminal
25	MODE	MODE	I	—	—	—	—	Fixed to H, H: Single chip mode
26	A04	A04	O	—	—	—	—	Address bus 04
27	A05	A05	O	—	—	—	—	Address bus 05
28	A06	A06	O	—	—	—	—	Address bus 06
29	A07	A07	O	—	—	—	—	Address bus 07
30	A08	A08	O	—	—	—	—	Address bus 08
31	A09	A09	O	—	—	—	—	Address bus 09
32	A10	A10	O	—	—	—	—	Address bus 10
33	A11	A11	O	—	—	—	—	Address bus 11
34	VDD	VDD	—	—	—	—	—	Power (+5V)
35	A12	A12	O	—	—	—	—	Address bus 12
36	A13	A13	O	—	—	—	—	Address bus 13
37	A14	A14	O	—	—	—	—	Address bus 14
38	A15	A15	O	—	—	—	—	Address bus 15
39	A16	A16	O	—	—	—	—	Address bus 16
40	A17	A17	O	—	—	—	—	Address bus 17, not used
41	A18	A18	O	—	—	—	—	Address bus 18, not used
42	P43	SCL	O	—	Pu	—	—	X24C00 data clock
43	Vss	Vss	—	—	—	—	—	GND (0V)
44	P44	SDA	I/O	—	Pu	—	—	X24C00 data (normal input)
45	P45	CONT1	I	—	Pu	—	H	External control signal 1
46	P46	CONT2	I	—	Pu	—	H	External control signal 2
47	P47	DSPSCL	I/O	—	Pu	H	H	MN19413 clock signal
48	P80	DSPSDA	I/O	—	Pu	H	H	MN19413 data signal
49	P81	RESERVE	O	—	—	L	—	Not used, open (DN2600F ADDR)
50	P82	SMRST_	O	—	Pd	L	L	SM5902AF/MN19413 reset signal
51	P83	YMLD_	O	—	Pu	H	H	SM5902AF data latch signal
52	P84	ZSENSE	I	—	—	—	—	SM5902AF status signal
53	P85	MCLK	O	—	—	H	—	MN662724, SM5902AF, BU2618 clock signal
54	VDD	VDD	—	—	—	—	—	Power (+5V)
55	P86	MDATA	O	—	—	H	—	MN662724, SM5902AF, BU2618 data signal
56	TM6IOB	ZLRCK	I	—	—	—	—	SM5902AF LRCK signal
57	P90	MLD_	O	—	Pu	H	H	MN662724 data latch signal
58	TM7IOA	RESERVE	O	—	—	L	—	Not used, open (DN2600F SPCLK)
59	P92	SENSE	I	—	—	—	—	MN662724 servo on status input signal
60	P93	FLOCK_	I	—	—	—	—	MN662724 focus servo on input signal
61	Vss	Vss	—	—	—	—	—	GND (0V)
62	P94	TLED	O	—	Pd	L	L	Tray LED, H: light
63	P95	TLOCK_	I	—	—	—	—	MN662724 tracking servo on input signal
64	P96	STAT	I	—	—	—	—	MN662724 servo status input signal (includes TLOCK)
65	P97	MNRST_	O	—	Pd	L	L	MN662724 reset signal
66	VDD (Vpp)	VDD	—	—	—	—	—	Power (+5V)
67	SBTO	SQCK	O	—	Pu	H	H	MN662724 sub-code read out clock signal
68	SBIO	SUBQ	I	—	Pu	—	H	MN662724 sub-code data input signal
69	P72	RESY	I	—	—	—	—	MN662724 frame sync re-sync signal, H: Sync
70	P73	EJECT_	I	—	Pu	—	—	Disc holder open/close SW input signal
71	SBI1	RXD	I	—	Pu	—	H	Data receive from RC
72	SBO1	TXD	O	—	Pu	H	H	Data send to RC
73	TEST1	TEST1	I	—	—	—	—	Fixed with 47k pull-up
74	TEST2	TEST2	I	—	—	—	—	Fixed with 47k pull-up
75	NMI_	NMI_	I	—	—	—	—	Fixed to 5V
76	PA0, IRQ0	BLKCK	I	Ed	—	—	—	MN662724 sub-code input (interrupt)
77	PA1, IRQ1_	STAT1	I	Ed	—	—	—	MN19413 status signal
78	PA2, IRQ2_	RESERVE	O	—	Pd	L	—	Not used, open (DN2600F STAT2)
79	PA3, IRQ3_	INSW_	I	Lv	Pu	—	H	Slide inner circle SW input
80	PA4, IRQ4_	BSYIN_	I	Lv	Pu	—	H	RC serial TXD line in-use input signal, L: In-use
81	ADSEP_	ADSEP	I	—	—	—	—	Fixed to 5V, H: Address/data separate mode
82	RST_	RST_	I	—	—	—	—	CPU reset
83	VDD	VDD	—	—	—	—	—	Power (+5V)
84	P00	BSYOUT_	O	—	Pu	H	H	RC serial TXD line in-use output signal, L: In-use
85	P01	RESERVE	O	—	—	L	—	Not used (open)
86	P02	RESERVE	O	—	—	L	—	Not used (open)
87	P03	PLAY	O	—	—	L	—	In-trace signal, H: Trace
88	P04	AMUTE	O	—	Pu	H	H	Analog mute signal
89	P05	OPEN_	O	—	Pu	L	H	Tray open SW
90	P06	CLOSE_	O	—	Pu	L	H	Tray close SW
91	P07	MCE_	O	—	Pu	H	H	BU2618 (main clock) enable signal
92	Vss	Vss	—	—	—	—	—	GND (0V)
93	D08	D00	I/O	—	—	—	—	Data bus 0
94	D09	D01	I/O	—	—	—	—	Data bus 1
95	D10	D02	I/O	—	—	—	—	Data bus 2
96	D11	D03	I/O	—	—	—	—	Data bus 3
97	D12	D04	I/O	—	—	—	—	Data bus 4
98	D13	D05	I/O	—	—	—	—	Data bus 5
99	D14	D06	I/O	—	—	—	—	Data bus 6
100	D15	D07	I/O	—	—	—	—	Data bus 7

SM5902AF (Main unit: IC301))
SHOCK PROOF MEMORY CONTROLLER

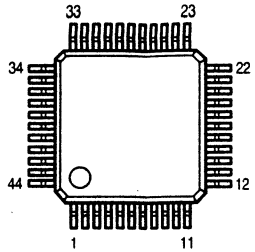

SM5902AF Terminal Function

Pin No.	Symbol	I/O	Function	Setting H	Setting L
1	VDD2	—	VDD power supply terminal.		
2	UC1	IP/O	Microcomputer interface extended I/O 1. Not Used (OPEN)		
3	UC2	IP/O	Microcomputer interface extended I/O 2. Not Used (OPEN)		
4	UC3	IP/O	Microcomputer interface extended I/O 3. Not Used (OPEN)		
5	UC4	IP/O	Microcomputer interface extended I/O 4. Not Used (OPEN)		
6	UC5	IP/O	Microcomputer interface extended I/O 5. Not Used (OPEN)		
7	DIT	O	Digital audio interface terminal.		
8	NTEST	IP	Test terminal.		Test
9	CLK	I	16.9344 MHz clock input.		
10	Vss	—	Ground terminal.		
11	YSRDATA	I	Audio serial input data.		
12	YLRCK	I	Audio serial input LR clock.	Lch	Rch
13	YSCK	I	Audio serial input bit clock.		
14	ZSCK	O	Audio serial output bit clock.		
15	ZLRCK	O	Audio serial output LR clock.	Lch	Rch
16	ZSRDATA	O	Audio serial output data.		
17	YFLAG	I	RAM overflow flag for signal processing IC.		Over
18	YFCLK	I	X'tal system frame clock.		
19	YBLKCK	I	Sub-code block clock signal.		
20	NRESET	I	System reset terminal.		Reset
21	ZSENSE	O	Microcomputer interface status output.		
22	VDD1	—	VDD power supply terminal.		
23	YDMUTE	I	Forcible mute terminal.	Mute	
24	YMLD	I	Microcomputer interface latch clock.		
25	YMDATA	I	Microcomputer interface serial data.		
26	YMCLK	I	Microcomputer interface shift clock.		
27	A10	O	DRAM address 10.		
28	NCAS	O	DRAM CAS control.		
29	D2	I/O	DRAM data input/output 2.		
30	D3	I/O	DRAM data input/output 3.		
31	D0	I/O	DRAM data input/output 0.		
32	D1	I/O	DRAM data input/output 1.		
33	NWE	O	DRAM WE control.		
34	NRAS	O	DRAM RAS control.		
35	A9	O	DRAM address 9.		
36	A8	O	DRAM address 8.		
37	A7	O	DRAM address 7.		
38	A6	O	DRAM address 6.		
39	A5	O	DRAM address 5.		
40	A4	O	DRAM address 4.		
41	A0	O	DRAM address 0.		
42	A1	O	DRAM address 1.		
43	A2	O	DRAM address 2.		
44	A3	O	DRAM address 3.		

AN8807SB (Main unit: IC102)
RF AMP

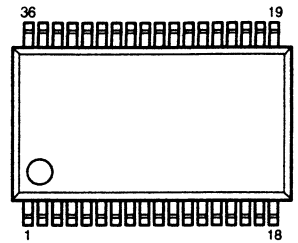

AN8807 Terminal Function

Pin No	Symbol	I/O	Function
1	PD	I	PD signal input for output monitor of LD.
2	LD	O	Connect to external transistor's base for LD drive.
3	LDON	I	LD APC ON/OFF switching signal.
4	C.CRS	—	Capacitor connecting terminal for CROSS.
5	VCC	—	Power supply connecting terminal.
6	$\overline{RF}$	I	RF AMP reversal input terminal. Connect a resistor.
7	RFOUT	O	RF AMP output terminal (reversal AMP).
8	RFIN	I	Input terminal of RF AGC.
9	C. AGC	—	Capacitor connecting terminal for RF AGC loop filter.
10	ARF	O	RF output terminal of after AGC.
11	C. ENV	—	Capacitor connecting terminal for RF.
12	C. EA	—	Capacitor connecting terminal for AMP.
13	C. SBDO	—	Capacitor connecting terminal for low speed detection of dark level DO detection.
14	BDO	O	BDO detection output terminal. Positive logic.
15	C. SBRT	—	Capacitor connecting terminal for low speed detection of OFTR detection.
16	OFTR	O	Output terminal of OFF TRACK detection. Positive logic.
17	NRFDET	O	Output terminal of RF signal amplitude detection. Negative logic.
18	GND	—	GND
19	ENV	O	ENV output terminal.
20	VREF	O	VCC x 0.5(V) output terminal.
21	LD OFF	I	Input terminal of LD APC forcible stop.
22	VDET	O	Output terminal of vibration detection.
23	TEBPF	I	Input terminal of vibration detection.
24	CROSS	O	Output terminal of TE CROSS detection signal.
25	TEOUT	O	Output terminal of TEAMP.
26	$\overline{TE}$	I	TEAMP reversal input terminal. Connect a resistor.
27	FEOUT	O	Output terminal of FEAMP.
28	$\overline{FE}$	I	FEAMP reversal input terminal. Connect a resistor.
29	FBAL	I	Control signal input terminal of FO balance adjustment.
30	TBAL	I	Control signal input terminal of TE balance adjustment.
31	PDFR	—	Resistor connecting terminal for setting IV converting resistance value of PDE.
32	PDER	—	Resistor connecting terminal for setting IV converting resistance value of PDF.
33	PDE	I	Connect to PIN diode E.
34	PDF	I	Connect to PIN diode F.
35	PDBD	I	Connect to B, D of astigmatism 1/4 divided PD.
36	PDAC	I	Connect to A, C of astigmatism 1/4 divided PD.

MN662724RPE (Main unit: IC103)
CD SERVO PROCESSOR

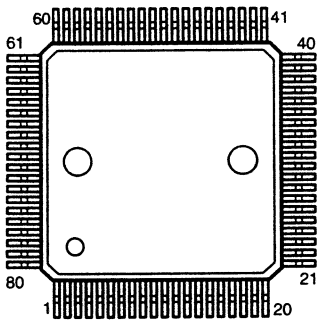

MN662724RPE Terminal Function

Pin No.	Symbol	I/O	Function
1	BCLK	O	Bit clock output for SRDATA.
2	LRCK	O	L,R discrimination signal output.
3	SRDATA	O	Serial data output.
4	DVDD1	—	Power supply for digital circuit.
5	DVSS1	—	GND for digital circuit.
6	TX	O	Digital audio interface output signal.
7	MCLK	I	Microcomputer command clock signal input (latches data at rising edge).
8	MDATA	I	Microcomputer command data input.
9	MLD	I	Microcomputer command load signal input. ("L": load)
10	SENSE	O	Sens signal output (OFT,, FESL,, NACEND,, NAJEND,, POSAD,, SFG).
11	$\overline{\text{FLOCK}}$	O	Focus servo draw in signal ("L": draw in state).
12	$\overline{\text{TLOCK}}$	O	Tracking servo draw in signal ("L": draw in state).
13	BLKCK	O	Subcode block clock signal (fGLKCK=75Hz).
14	SQCK	I	External clock input for subcode Q register.
15	SUBQ	O	Subcode Q code output.
16	DMUTE	I	Muting input ("H": mute).
17	STAT	O	Status signal (CRC,, CUE,, CLVS,, TTSTOP,, FCLV,, SQOK).
18	$\overline{\text{RST}}$	I	Reset input ("L": reset).
19	SMCK	O	8.4672MHz clock signal output at MSEL="H". 4.2336MHz clock signal output at MSEL="L".
20	PMCK	O	88.2kHz clock output.
21	TRV	O	Traverse forcible sending output.
22	TVD	O	Traverse drive output.
23	PC	O	Spindle motor ON signal ("L": ON).
24	ECM	O	Spindle motor drive signal (forcible mode output). 3-state.
25	ECS	O	Spindle motor drive signal (servo error signal output).
26	KICK	O	Kick pulse output.
27	TRD	O	Tracking drive output.
28	FOD	O	Focus drive output.
29	VREF	I	Reference voltage for DA output portion (TVD,BCS,TRD,FOD,FBAL,TBAL).
30	FBAL	O	Focus balance adjusting output.
31	TBAL	O	Tracking balance adjusting output.
32	FE	I	Focus error signal input (analog input).
33	TE	I	Tracking error signal input (analog input).
34	RFENV	I	RF envelope signal input (analog input).
35	VDET	I	Vibration detecting signal input ("H": detect).
36	OFT	I	Off track signal input ("H": off track).
37	TRCRS	I	Track cross signal input.
38	$\overline{\text{RFDET}}$	I	RF detecting signal input ("L": detect).
39	BDO	I	Drop out signal input ("H": drop out).
40	LDON	O	Laser ON signal output ("H": ON).
41	PLLF2	I/O	Loop filter terminal for PLL.
42	PLAY	O	Play signal output ("H": play).
43	WVEL	O	Double speed status signal output.
44	ARF	I	RF signal input.
45	IREF	I	Reference current input terminal.
46	DRF	I	Bias terminal for DSL.
47	DSLF	I/O	Loop filter terminal for DSL.
48	PLLF	I/O	Loop filter terminal for PLL.
49	VCOF	I/O	Loop filter terminal for VCO.
50	AVDD2	—	Power supply for analog circuit (for DSL,, PLL,, DA output sections).
51	AVSS2	—	GND for analog circuit (for DSL,, PLL,, DA output sections).
52	CK384	O	384 fs clock output.
53	PCK	O	PLL extract clock output (fPCK=4.321MHz).
54	TOFS	O	Tracking offset adjust signal output.
55	SUBC	O	Subcode serial output data output.
56	SBCK	I	Clock input for subcode serial output.
57	VSS	—	GND for osc. circuit.
58	X1	I	X'tal osc. circuit input terminal. f=16.9344MHz or 33.8688MHz.
59	X2	O	X'tal osc. circuit output terminal (use 33.8688MHz at double speed PB).
60	VDD	—	Power supply for osc. circuit.
61	BYTCK	O	Byte clock output.
62	$\overline{\text{CLDCK}}$	O	Subcode frame clock signal output (fCLDCK=7.35kHz).
63	FCLK	O	X'tal frame clock output (fFCLK=7.35kHz).
64	IPFLAG	O	Interpolation flag output ("H": interpolation).
65	FLAG	O	Flag output.
66	CLVS	O	Spindle servo phase sync state signal output ("H":CLV,, "L":rough servo).
67	CRC	O	Subcode CRC check result output ("H":OK,, "L":NG).
68	DEMPH	O	Deemphasis detecting signal output ("H":ON).
69	RESY	O	Flag 6 output at SSEL:"H"(RAM address reset generating signal by Jitter margin over of CLV servo. "L":address reset generates). RESY output at SSBL:"L"(Re-sync signal output of frame sync. "H": sync,, "L":out sync).
70	SDAT48	O	48 fs serial data output.
71	$\overline{\text{TEST}}$	I	Test terminal (normally "H").
72	AVDD1	—	Power supply for digital circuit.
73	LRCK48	O	48 fs L, R discrimination signal output.
74	AVSS1	—	GND for digital circuit.
75	BCLK48	O	48 fs bit clock output for SDAT48.
76	RSEL	I	RF signal polarity specify terminal (RSEL="H" at brightness level "H". RSEL="L" at brightness level "L").
77	CSEL	I	X'tal osc. frequency specify terminal,, X'tal osc. freq. 33.8688MHz:CSEL"H",, 16.9344MHz:CSEL"L".
78	PSEL	I	Test terminal (normally "L").
79	MSEL	I	SMCK terminal. Output frequency shifting terminal ("H":SMCK=8.4672MHz,"L":SMCK=4.2336MHz).
80	SSEL	I	Sub Q teminal. Output mode shifting terminal ("H":Q code buffer using mode).

MN102L2503 (Remote Unit: IC101)
µCOM

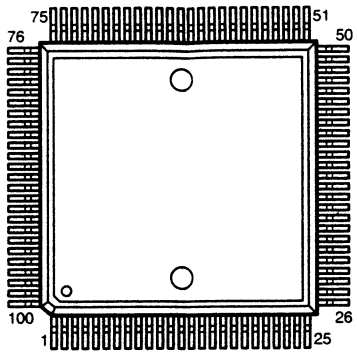

MN102L2503 Terminal Function

Pin No.	Pin Name	Symbol	I/O	DET	Ext	Ini	Res	Function
1	P60, WAIT	P60	O	—	—	L	—	Not used (open)
2	RE_	RE_	O	—	—	—	—	ROM/EEPROM read enable output
3	WEL_	WEL_	O	—	—	—	—	Not used (open)
4	WEH_	WEH_	O	—	—	—	—	Not used (open)
5	CS0_	CS0_	O	—	—	—	—	ROM chip select
6	CS1_	CS1_	O	—	—	—	—	Not used (open)
7	CS2_	CS2_	O	—	—	—	—	Not used (open)
8	CS3_	CS3_	O	—	—	—	—	Not used (open)
9	P54, BREQ_	LEDA	O	—	Pu	H	H	CD1/2 LED select, L: Light (CUE DGS A1 B)
10	P55, BRACK_	LEDB	O	—	Pu	H	H	CD1/2 LED select, L: Light (PLAY BEND A2)
11	P56_	DLOAD	I	—	Pd	—	L	ROM rewrite signal, H: Rewrite (spare)
12	WORD_	WORD	I	—	—	—	—	Fixed to 5V, H: 8-bit bus
13	A00	A00	O	—	—	—	—	Address bus 00, ROM connect
14	A01	A01	O	—	—	—	—	Address bus 01
15	A02	A02	O	—	—	—	—	Address bus 02
16	A03	A03	O	—	—	—	—	Address bus 03
17	VDD	VDD	—	—	—	—	—	Power (+5V)
18	SYSCLK	SYSCLK	O	—	—	—	—	System clock output (OSCI x 1/2)
19	Vss	Vss	—	—	—	—	—	GND (0V)
20	XI	XI	I	—	—	—	—	Fixed to GND
21	XO	XO	O	—	—	—	—	Not used (open)
22	VDD	VDD	—	—	—	—	—	Power (+5V)
23	OSCI	OSCI	I	—	—	—	—	X'tal input terminal, 12.288MHz
24	OSCO	OSCO	O	—	—	—	—	X'tal output terminal
25	MODE	MODE	I	—	—	—	—	Fixed to GND (0V), L: External ROM mode
26	A04	A04	O	—	—	—	—	Address bus 04
27	A05	A05	O	—	—	—	—	Address bus 05
28	A06	A06	O	—	—	—	—	Address bus 06
29	A07	A07	O	—	—	—	—	Address bus 07
30	A08	A08	O	—	—	—	—	Address bus 08
31	A09	A09	O	—	—	—	—	Address bus 09
32	A10	A10	O	—	—	—	—	Address bus 10
33	A11	A11	O	—	—	—	—	Address bus 11
34	VDD	VDD	—	—	—	—	—	Power (+5V)
35	A12	A12	O	—	—	—	—	Address bus 12
36	A13	A13	O	—	—	—	—	Address bus 13
37	A14	A14	O	—	—	—	—	Address bus 14
38	A15	A15	O	—	—	—	—	Address bus 15, not used
39	A16	A16	O	—	—	—	—	Address bus 16, not used
40	A17	A17	O	—	—	—	—	Address bus 17, not used
41	A18	A18	O	—	—	—	—	Address bus 18, not used
42	A19	A19	O	—	—	—	—	Address bus 19, not used
43	Vss	Vss	—	—	—	—	—	GND (0V)
44	A20	A20	O	—	—	—	—	Address bus 20, not used
45	A21	A21	O	—	—	—	—	Address bus 21, not used
46	A22, STOP, AN6, P46	KOUT10	O	—	Pu	—	H	CD1 key scan/LED output 0, H: Light (CEU PLAY)
47	A23, WDOUT, AN7, P47	MC_/RC	I	—	—	—	—	Mecha. mode: L, RC mode H, H fixed (spare)
48	TM0IO, P80	KOUT11	O	—	Pu	—	H	CD1 key scan/LED output 1, H: Light (BEND DIGI)
49	TM1IO, P81	KOUT12	O	—	Pu	—	H	CD1 key scan/LED output 2, H: Light (A1 A2)
50	TM2IO, P82	KOUT13	O	—	Pu	—	H	CD1 key scan/LED output 3, H: Light (B)
51	TM3IO, P83	FLNCS1	O	—	Pu	H	H	CD1 MN12510F latch signal
52	TM4IO, P84	FLNCS2	O	—	Pu	H	H	CD2 MN12510F latch signal
53	TM5IO, P85	FLCLK	O	—	Pu	H	H	Cd1/2 MN12510F data clock signal
54	VDD	VDD	—	—	—	—	—	Power (+5V)
55	TM6IOA, P86	FLSDO	I	—	—	—	—	Cd1/2 MN12510F data input signal
56	TM6IOB, P87	FLSDI	O	—	—	H	—	CD1/2 MN12510F data output signal
57	TM610C, P90	KOUT20	O	—	Pu	H	H	CD2 key scan/LED output 0, H: Light (CUE PLAY)
58	TM7IOA, P91	KOUT21	O	—	Pu	H	H	CD2 key scan/LED output 1, H: Light (BEND DIGI)
59	TM7IOB, P92	KOUT22	O	—	Pu	H	H	CD2 key scan/LED output 2, H: Light (A1 A2)
60	TM71C, P93	KOUT23	O	—	Pu	H	H	CD2 key scan/LED output 3, H: Light (B)
61	Vss	Vss	—	—	—	—	—	GND (0V)
62	AN0, P94	PITC1	I	—	—	—	—	CD1 pitch VR center value signal
63	AN1, P95	PIT1	I	—	—	—	—	CD1 pitch VR signal
64	AN2, P96	PITC2	I	—	—	—	—	CD2 pitch VR center value signal
65	AN3, P97	PIT2	I	—	—	—	—	CD2 pitch VR signal
66	VDD (Vpp)	VDD	—	—	—	—	—	Power (+5V)
67	SBT0, P70	P70	O	—	—	L	—	Not used (open)
68	SBI0, P71	RXD2	I	—	Pu	—	H	Data receive between RC-RC
69	SBO0, P72	TXD2	O	—	Pu	H	H	Data send between RC-RC
70	SBT1, P73	P73	O	—	—	L	—	Not used (open)
71	SBI1, P74	RXD1	I	—	Pu	—	H	Data receive from main unit
72	SBO1, P75	TXD1	O	—	Pu	H	H	Data send to main unit
73	TEST1	TEST1	I	—	—	—	—	Fixed with 47k pull-up
74	TEST2	TEST2	I	—	—	—	—	Fixed with 47k pull-up
75	NMI_	NMI	I	—	—	—	—	Fixed to 5V
76	PA0, IRQ0_	TRSA1	I	Ed	Pu	—	H	CD1 track select encoder A interrupt input
77	PA1, IRQ1_	JOG10	I	Ed	Pu	—	H	CD1 jog 0 interrupt input
78	PA2, IRQ2_	TRSA2	I	Ed	Pu	—	H	CD2 track select encoder A interrupt input
79	PA3, IRQ3_	JOG20	I	Ed	Pu	—	H	CD2 jog 0 interrupt input
80	PA4, IRQ4_	RF-RC	I	Ed	Pd	—	L	Data receive from the RC8001ST
81	ADSEP_	ADSEP	I	—	—	—	—	Fixed to 5V, H: Address/data separate mode
82	RST_	RST_	I	—	—	—	—	CPU reset
83	VDD	VDD	—	—	—	—	—	Power (+5V)
84	P00, D00	TRSB2	I	—	Pu	—	H	CD2 track select encode B input
85	P01, D01	JOG21	I	—	Pu	—	H	CD2 jog 1 input
86	P02, D02	TRSB1	I	—	Pu	—	H	CD1 track select encoder B input
87	P03, D03	JOG11	I	—	Pu	—	H	CD1 jog 1 input
88	P04, D04	KEY IN0	I	—	Pu	—	H	CD1/2 key scan input 0
89	P05, D05	KEY IN1	I	—	Pu	—	H	CD1/2 key scan input 1
90	P06, D06	KEY IN2	I	—	Pu	—	H	CD1/2 key scan input 2
91	P07, D07	KEY IN3	I	—	Pu	—	H	CD1/2 key scan input 3
92	Vss	Vss	—	—	—	—	—	GND (0V)
93	D08	D00	I/O	—	—	—	—	Data bus 0
94	D09	D01	I/O	—	—	—	—	Data bus 1
95	D10	D02	I/O	—	—	—	—	Data bus 2
96	D11	D03	I/O	—	—	—	—	Data bus 3
97	D12	D04	I/O	—	—	—	—	Data bus 4
98	D13	D05	I/O	—	—	—	—	Data bus 5
99	D14	D06	I/O	—	—	—	—	Data bus 6
100	D15	D07	I/O	—	—	—	—	Data bus 7

MN12510F (Remote unit: IC201, 301)
FL DRIVER

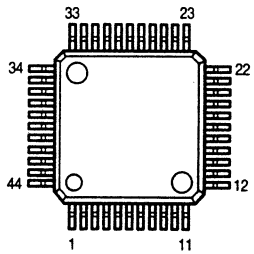

MN12510F Terminal Function

Pin No.	Symbol	I/O	Function
1	P21	O	Segment output15 (hi-voltage proof output).
2	P20	O	LED drive output (hi-voltage proof output).
3	P03	O	No connection.
4	P02	O	No connection.
5	P01	O	Digit output10 (hi-voltage proof output).
6	P00	O	Digit output9 (hi-voltage proof output).
7	DGT7	O	Digit output8 (hi-voltage proof output).
8	DGT6	O	Digit output7 (hi-voltage proof output).
9	DGT5	O	Digit output6 (hi-voltage proof output).
10	DGT4	O	Digit output5 (hi-voltage proof output).
11	NC	—	No connection.
12	DGT3	O	Digit output4 (hi-voltage proof output).
13	DGT2	O	Digit output3 (hi-voltage proof output).
14	DGT1	O	Digit output2 (hi-voltage proof output).
15	DGT0	O	Digit output1 (hi-voltage proof output).
16	Vpp	I	ELP driver power supply, VPP: VDD -24V.
17	NC	—	No connection.
18	VDD	I	Power supply terminal, VDD: +5V ±0.5V.
19	OSC1	I	Clock oscillation input terminal.
20	OSC2	O	Clock oscillation output terminal.
21	Vss	I	Power supply terminal, Vss: 0V.
22	NCS	I	Chip select input, "L": Serial input enable, "H": Disable.
23	SCK	I	Clock input for serial transference.
24	SDI	O	Serial data input terminal.
25	SDO	O	Serial data output terminal.
26	P30	I	Key scan input terminal.
27	P31	I	Key scan input terminal.
28	P32	I	Key scan input terminal.
29	P33	O	LED drive output terminal.
30	P34	O	LED drive output terminal.
31	SEG0	O	Segment output1 (hi-voltage proof output).
32	SEG1	O	Segment output2 (hi-voltage proof output).
33	SEG2	O	Segment output3 (hi-voltage proof output).
34	SEG3	O	Segment output4 (hi-voltage proof output).
35	SEG4	O	Segment output5 (hi-voltage proof output).
36	SEG5	O	Segment output6 (hi-voltage proof output).
37	SEG6	O	Segment output7 (hi-voltage proof output).
38	SEG7	O	Segment output8 (hi-voltage proof output).
39	P10	O	Segment output9 (hi-voltage proof output).
40	P11	O	Segment output10 (hi-voltage proof output).
41	P12	O	Segment output11 (hi-voltage proof output).
42	P13	O	Segment output12 (hi-voltage proof output).
43	P23	O	Segment output13 (hi-voltage proof output).
44	P22	O	Segment output14 (hi-voltage proof output).

AN8816SB (Main unit: IC101)
PU DRIVER

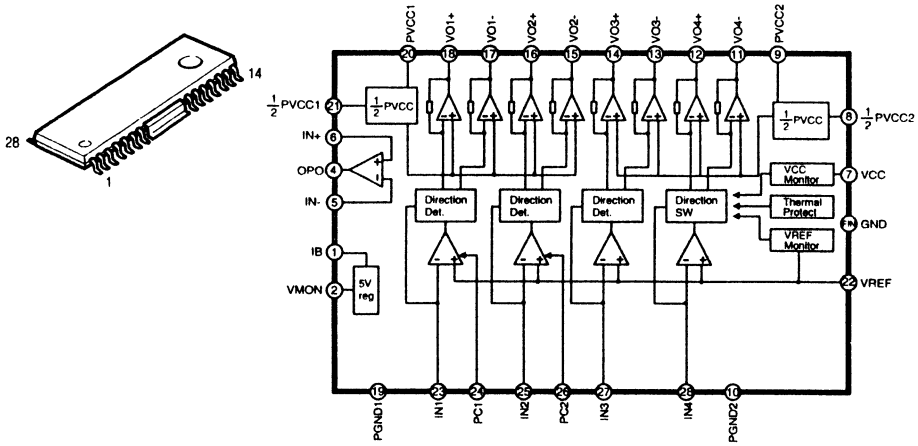

BA6287F (Main unit: IC104)
LOADING DRIVER

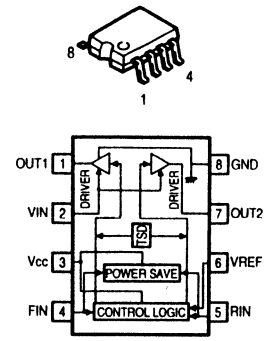

BU2618 (Main unit: IC303)

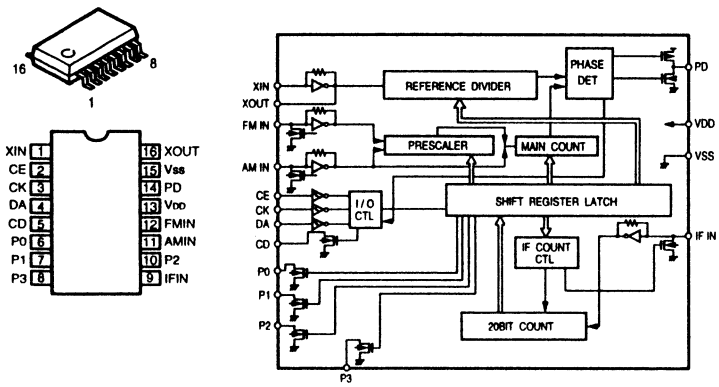

BA15218F (Main unit: IC409)

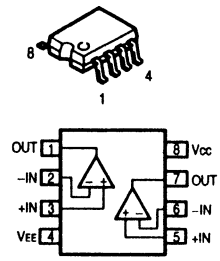

GM71C17400C or HYS117400C
(Main unit: IC302, 403,404)
16M DRAM

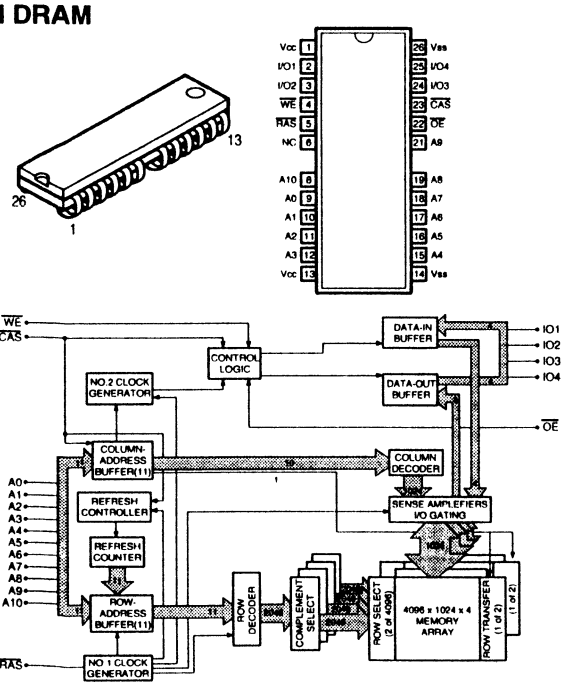

TC9246F (Main unit: IC305)
MAX202CSE (Remote unit: IC401)
(Power unit: IC601)

TC9246F

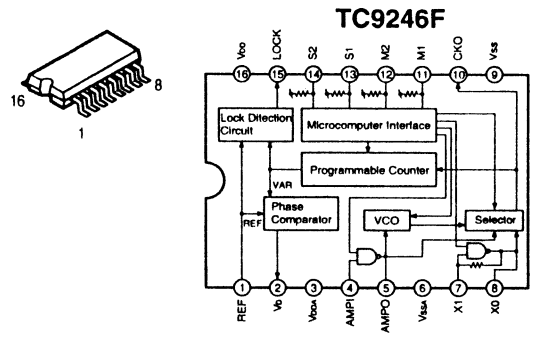

MAX202CSE

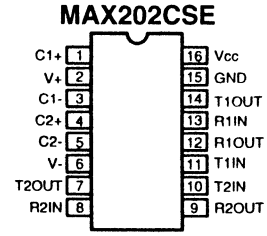

MN19413A (Main unit: IC401)
AUDIO SIGNAL PROCESSOR

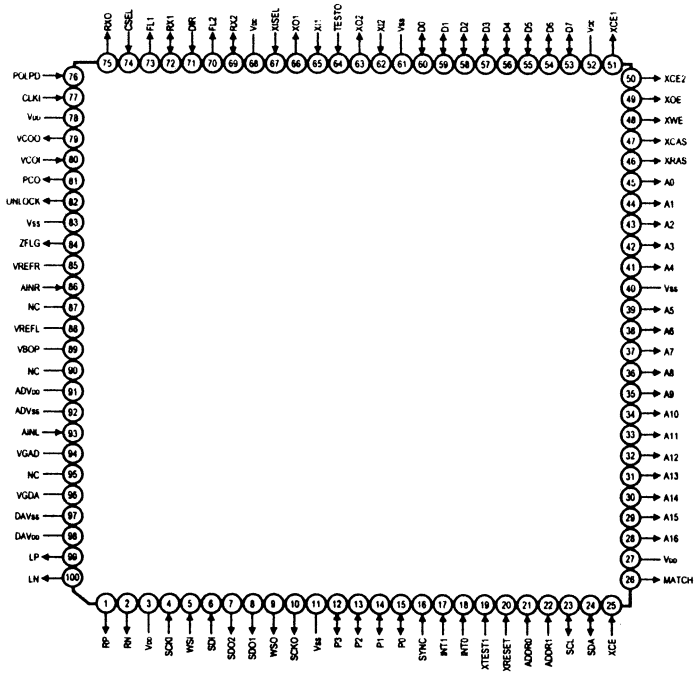

CAT28F010-09 (Remote unit: IC102)
FLASH MEMORY

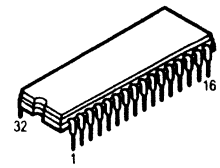

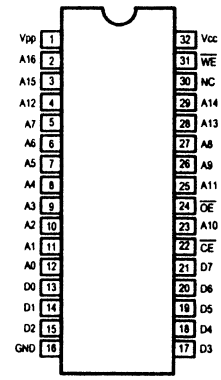

TC74HC08AF (Power unit: IC603)

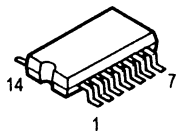

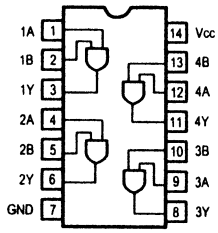

TC7WU04F (Power unit: IC701, 702)

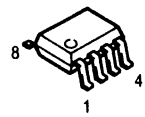

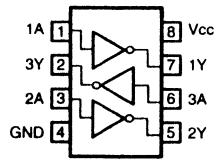

NJM7805FA(S)
(Power unit: IC608, 609, 611 ~ 613)

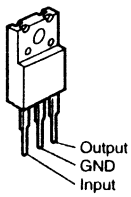

NJM7905FA
(Power unit: IC614)

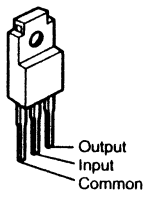

S-24C01AFJA (Power unit: IC602)
EEPROM

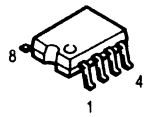

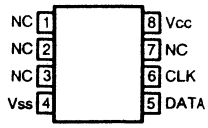

MN1382-R
(Remote unit: IC103)
MN1382-S
(Power unit: IC604)

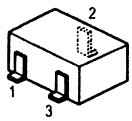

1: Out
2: VDD
3: Vss

● TRANSISTORS

2SD2144S

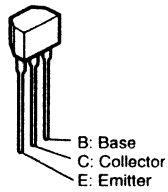

2SB1185 (E/F)

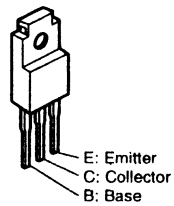

2SB562 (C)

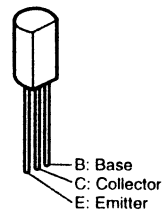

2SB766S
2SC2412K (S)

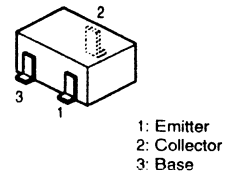

DTA114EK
DTC114EK
DTC143EK

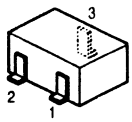

1: GND/Emittor
2: Input/Base
3: Output/Collector

DTA114EK

(PNP Type)

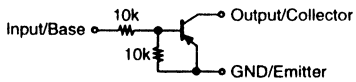

DTC114EK
DTC143EK

(NPN Type)

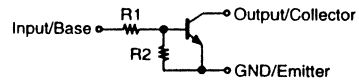

	R1	R2
DTC114EK	10 kohm	10 kohm
DTC143EK	4.7 kohm	4.7 kohm

● DIODES(Including LED)

DAP202K

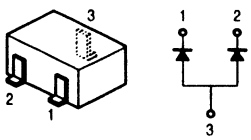

1: Cathode
2: Cathode
3: Anode

1SS270A

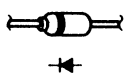

HZS2B-1
HZS6B-3
MTZJ4.3A
MTZJ27A

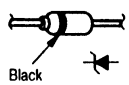

D3SBA20

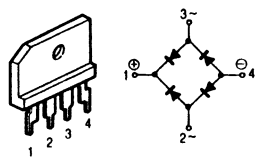

1SR139-200

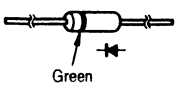

MA151WA
MA151WK

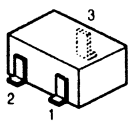

MA151WA

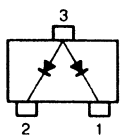

MA151WK

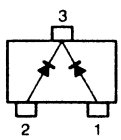

SLR-325DC (Orange)
SLR-325MC (Green)
SLR-325VC (Red)

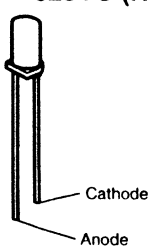

SEL1710K (Yellow)

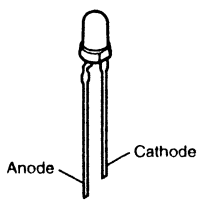

● FL DISPLAY CM1941M (FL201, 301)

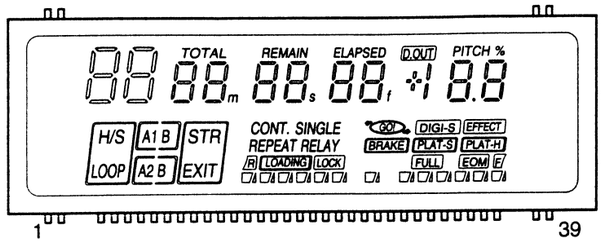

Pin Connection

Pin No.	1	2	3	4	5	6	7	8	9	10	11	12	13	14	15	16	17	18	19	20	21	22	23	24	25	26	27	28	29	30
Cnnection	F1	F1	NP	NP	P1	P2	P3	P4	P5	P6	P7	P8	P9	P10	P11	P12	P13	P14	P15	P16	NC	NC	NC	NC	NC	9G	8G	P17	7G	6G

Pin No.	31	32	33	34	35	36	37	38	39
Cnnection	5G	4G	3G	2G	1G	NP	NP	F2	F2

Note 1) F1,F2 : Filament
2) NP : No pin
3) NC : No connection(NC pin should be electrically open on the PC board)
4) DL : Datum Line
5) 1G~9G : Grid

Grid Assignment

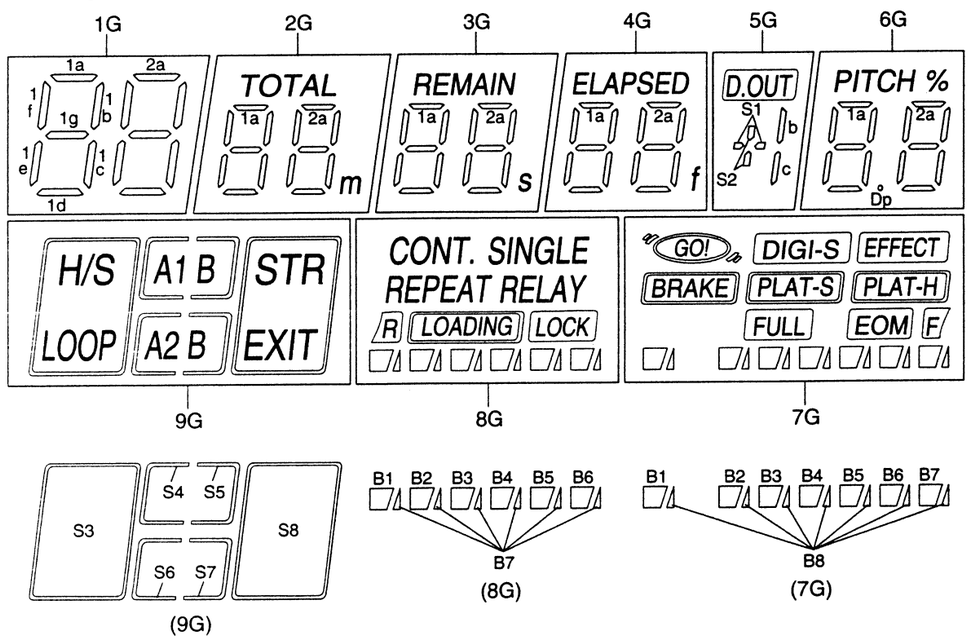

Anode Connection

	1G	2G	3G	4G	5G	6G	7G	8G	9G
P1	2a	2a	2a	2a	–	2a	B1	B1	S3
P2	2b	2b	2b	2b	–	2b	B2	B2	H/S
P3	2f	2f	2f	2f	–	2f	B3	B3	LOOP
P4	2g	2g	2g	2g	–	2g	B4	B4	S4
P5	2c	2c	2c	2c	–	2c	B5	B5	A1
P6	2e	2e	2e	2e	–	2e	B6	B6	B
P7	2d	2d	2d	2d	–	2d	B7	B7	S5
P8	1a	1a	1a	1a	S1	1a	F	–	S6
P9	1b	1b	1b	1b	S2	1b	EOM	LOCK	A2
P10	1f	1f	1f	1f	b,c	1f	FULL	LOADING	B
P11	1g	1g	1g	1g	–	1g	PLAT-H	R	S7
P12	1c	1c	1c	1c	–	1c	PLAT-S	RELAY	S8
P13	1e	1e	1e	1e	–	1e	BRAKE	REPEAT	STR
P14	1d	1d	1d	1d	–	1d	EFFECT	SINGLE	EXIT
P15	–	m	s	f	–	Dp	DIGI-S	CONT.	–
P16	–	TOTAL	REMAIN	ELAPSED	D.OUT	PITCH %	GO!	–	–
P17	–	–	–	–	–	–	B8	–	–

PRINTED WIRING BOARDS

GU-3225 MAIN UNIT

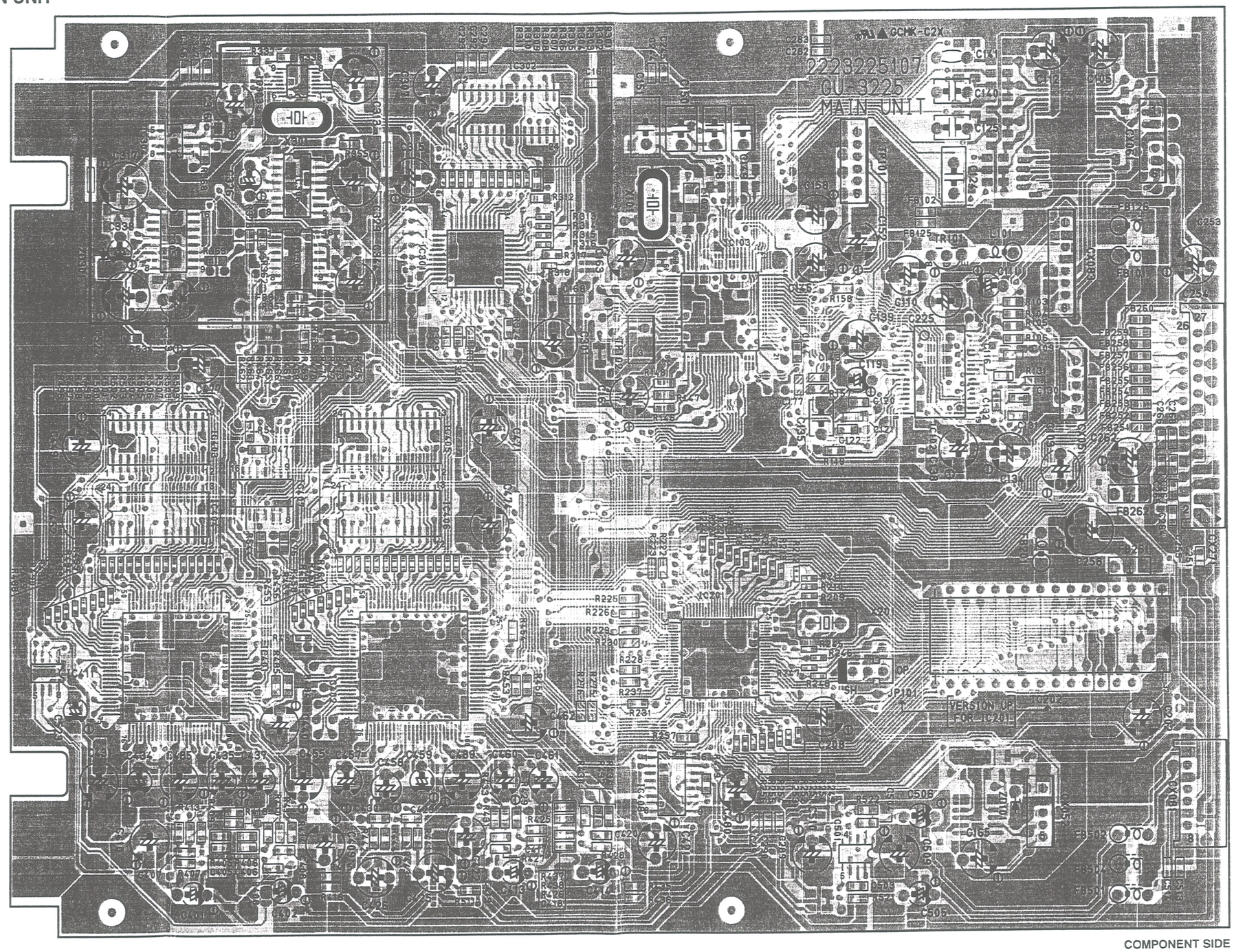

COMPONENT SIDE

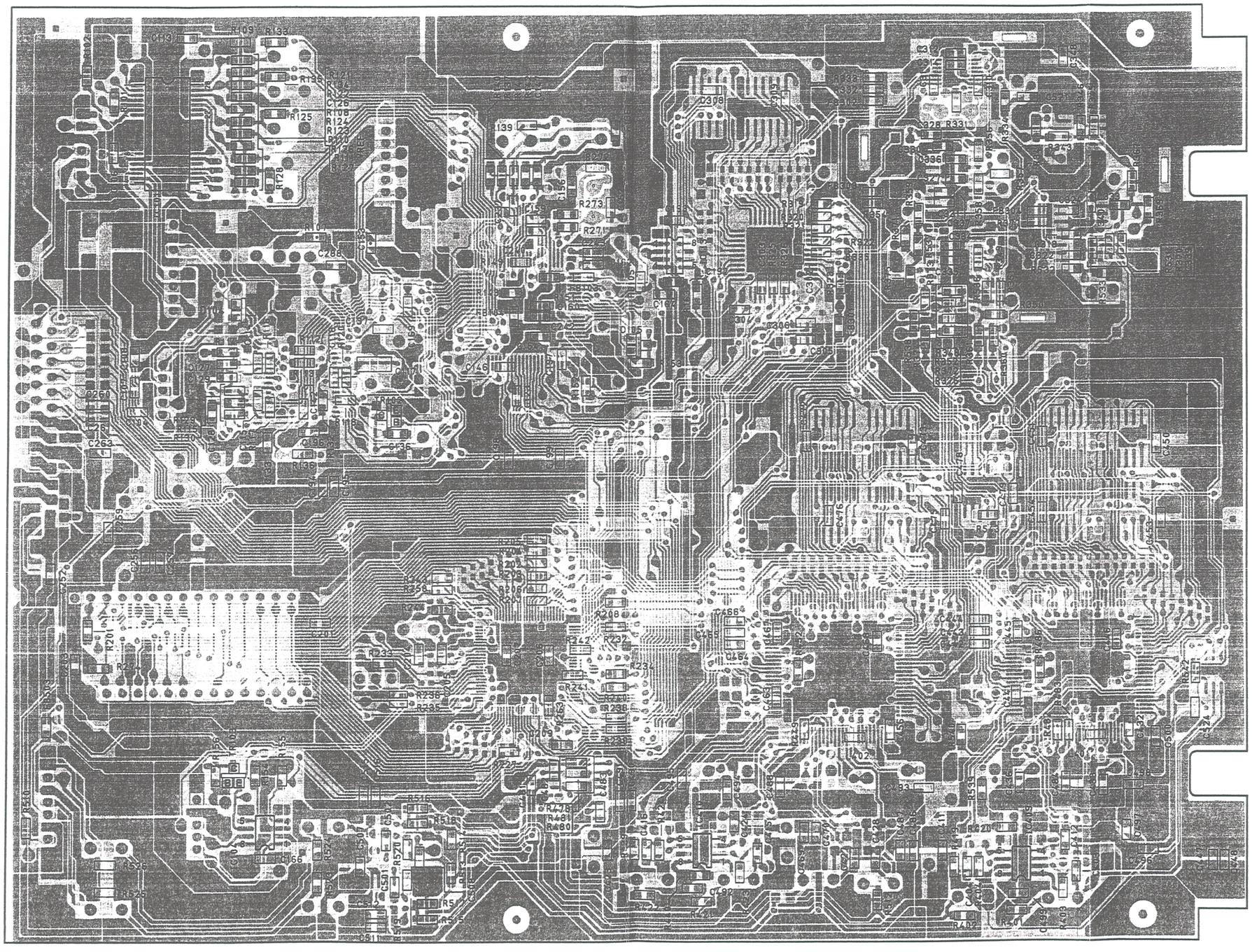

FOIL SIDE

GU-3226 POWER UNIT

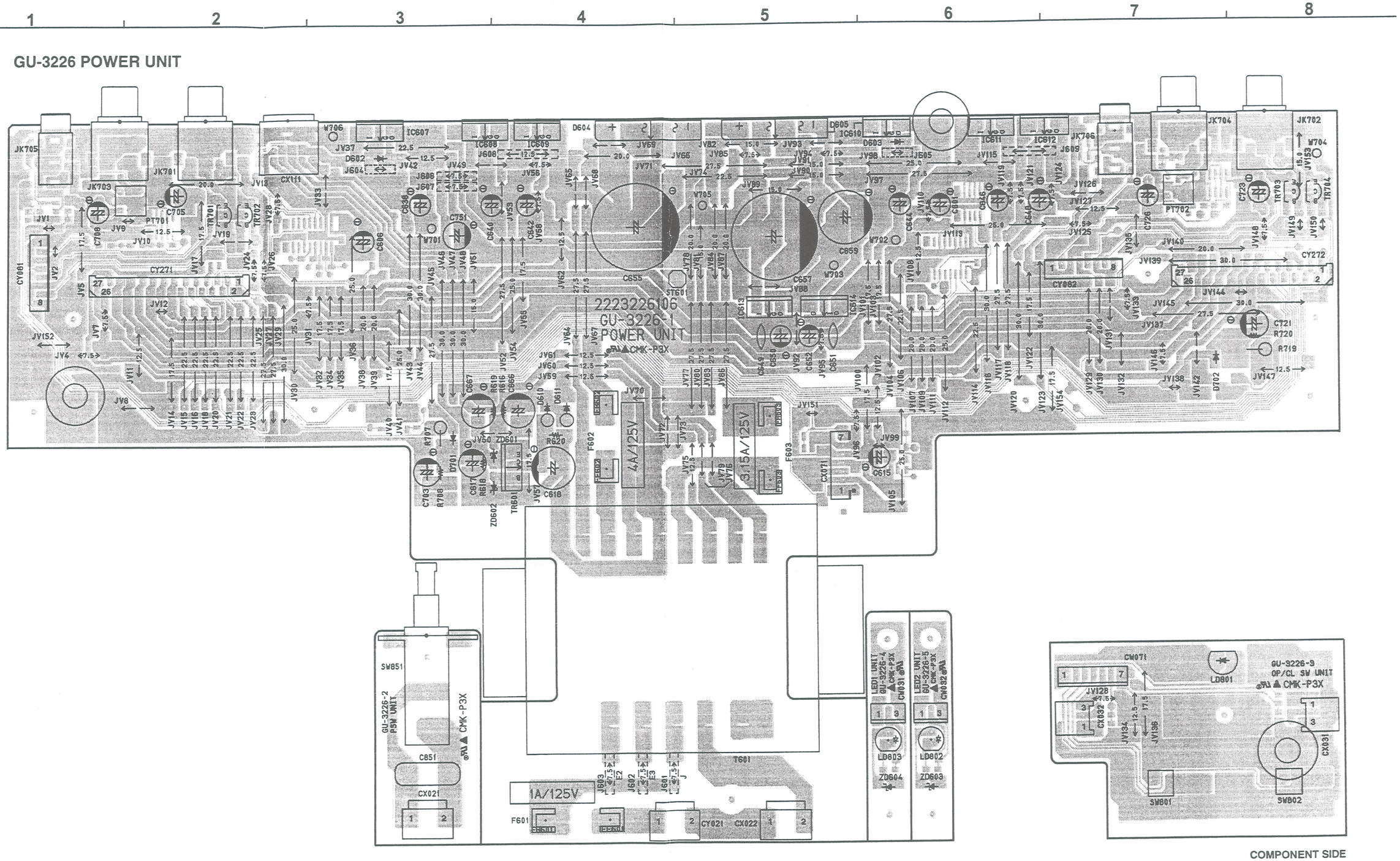

COMPONENT SIDE

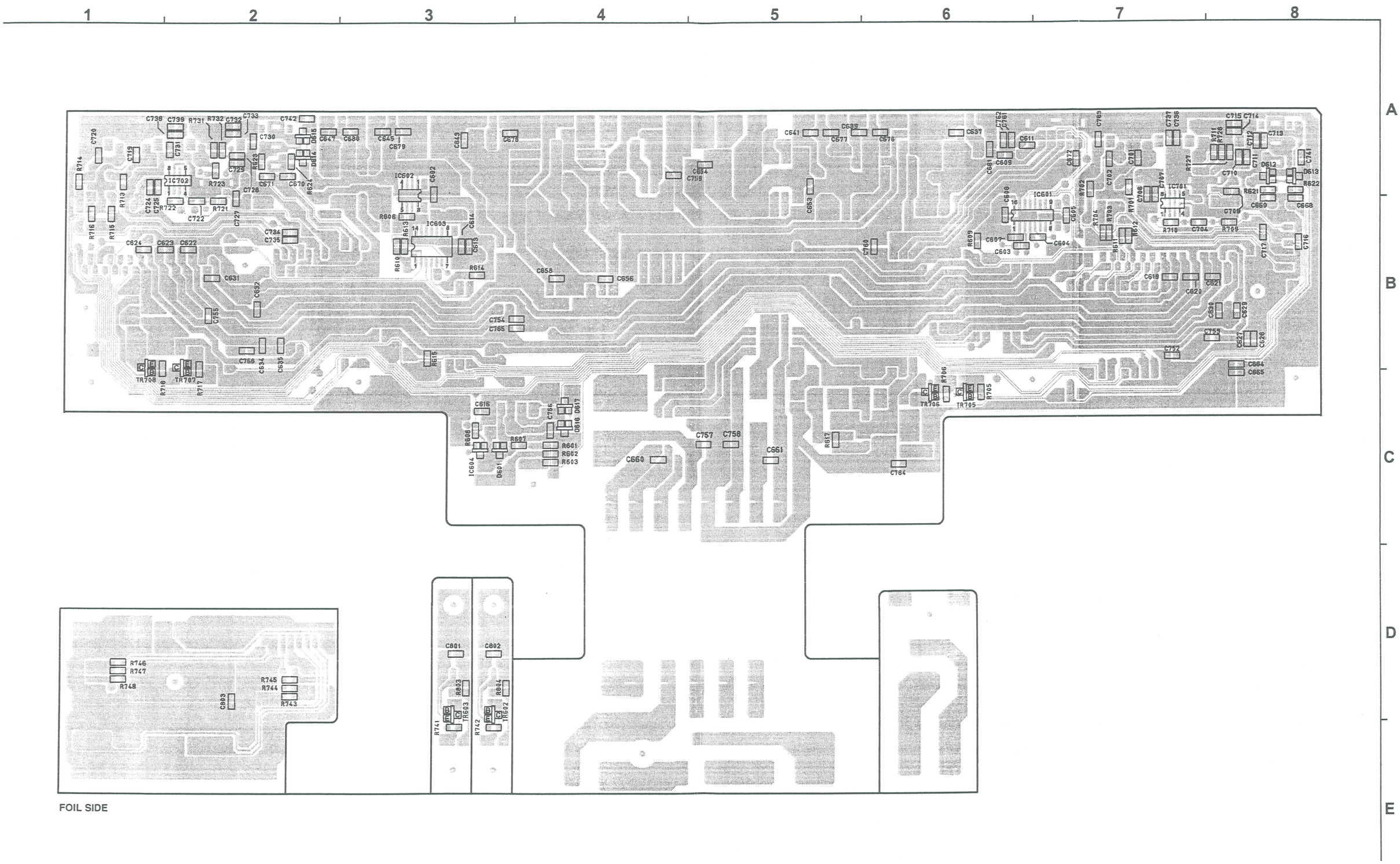

FOIL SIDE

GU-3310 REMOTE UNIT

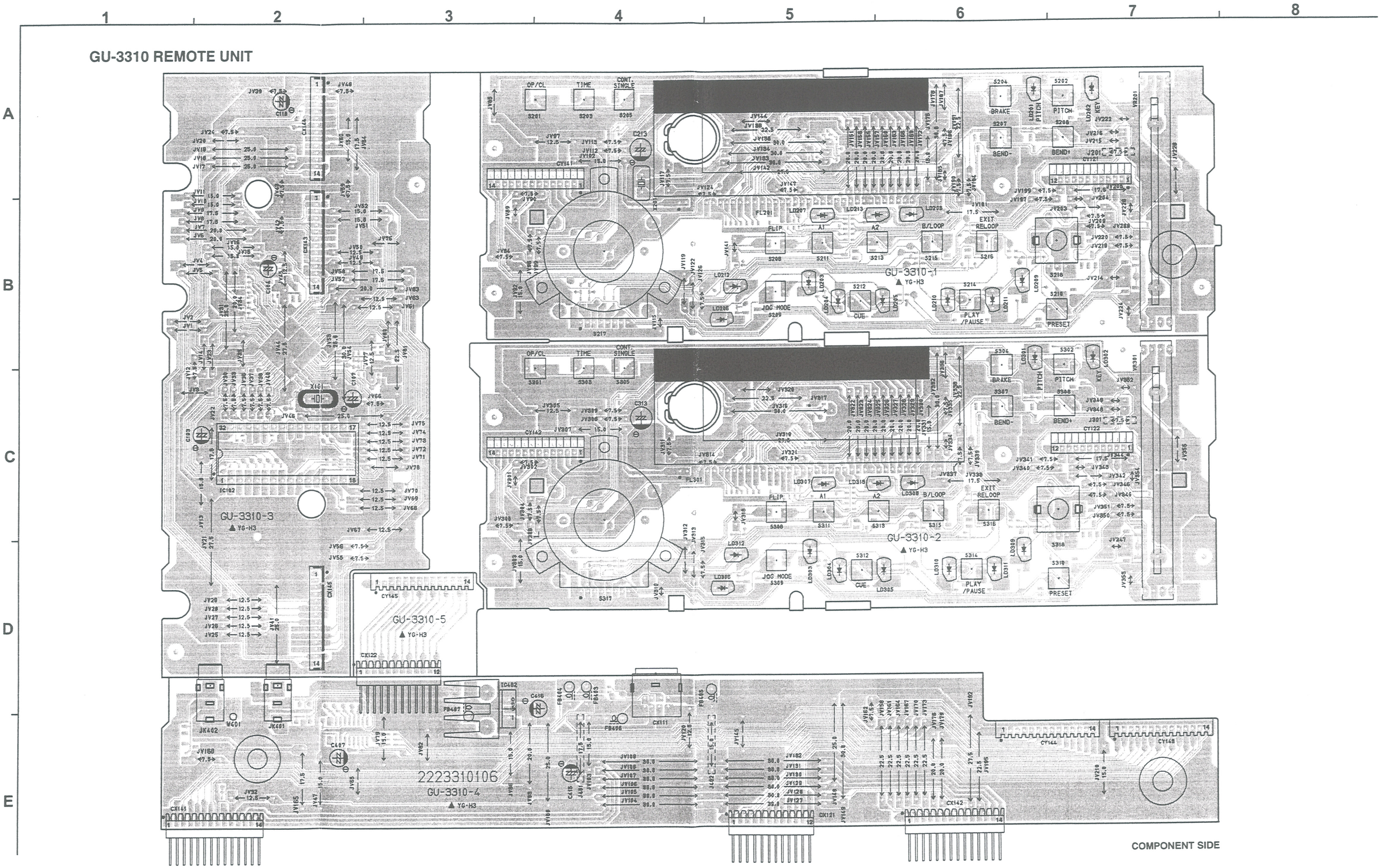

COMPONENT SIDE

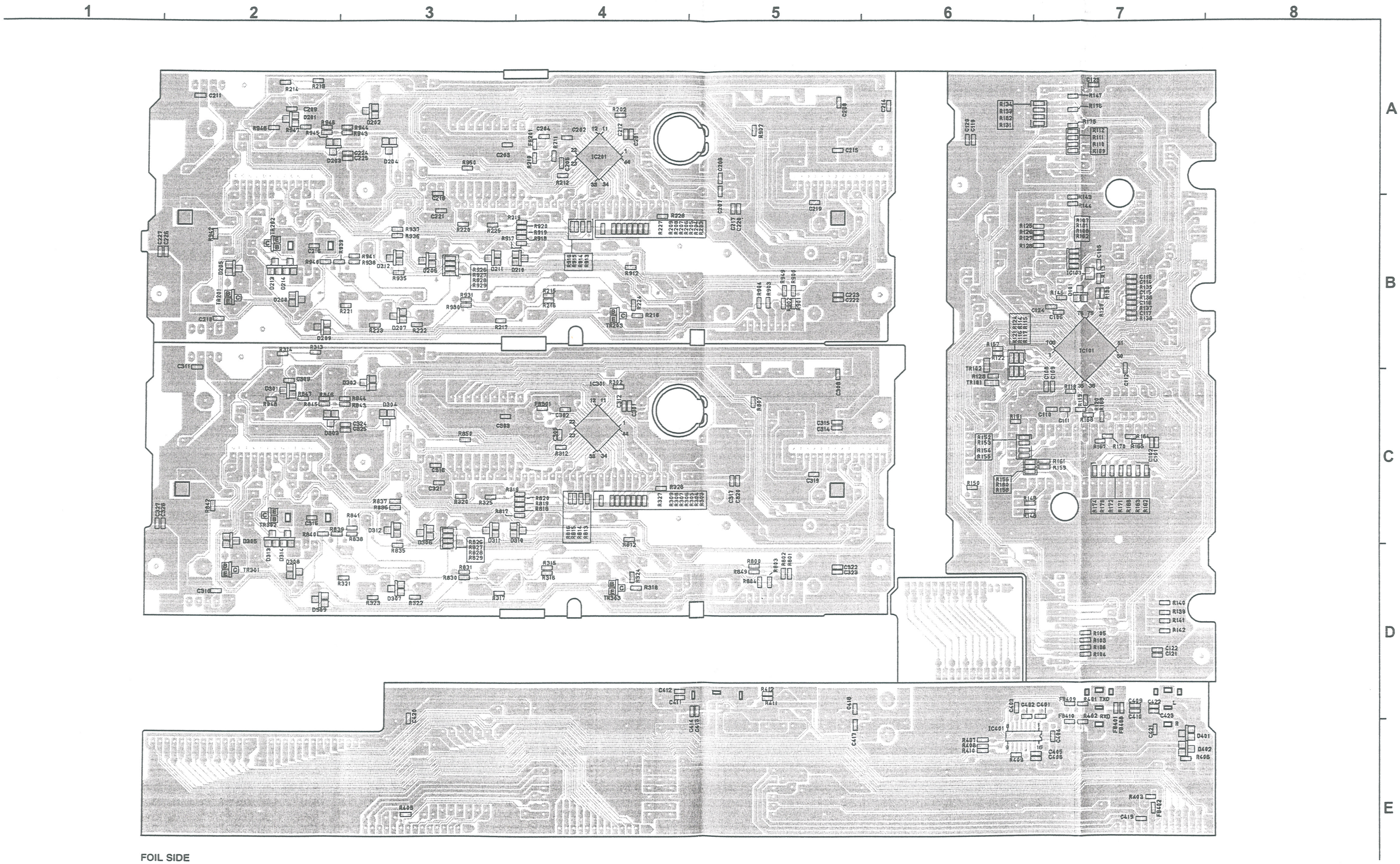

FOIL SIDE

NOTE FOR PARTS LIST

- Part indicated with the mark "⊙" are not always in stock and possibly to take a long period of time for supplying, or in some case supplying of part may be refused.
- When ordering of part, clearly indicate "1" and "I" (i) to avoid mis-supplying.
- Ordering part without stating its part number can not be supplied.
- Part indicated with the mark "★" is not illustrated in the exploded view.
- Not including Carbon Film ±5%, 1/4W Type in the P.W.Board parts list. (Refer to the Schematic Diagram for those parts.)

WARNING:
Parts marked with this symbol ⚠ ▒ have critical characteristics.
Use ONLY replacement parts recommended by the manufacturer.

● Resistors

Ex.: RN 14K 2E 182 G FR
Type / Shape and performance / Power / Resistance / Allowable error / Others

RD : Carbon	2B : 1/8W	F : ±1%	P : Pulse-resistant type
RC : Composition	2E : 1/4W	G : ±2%	NL : Low noise type
RS : Metal oxide film	2H : 1/2W	J : ±5%	NB : Non-burning type
RW : Winding	3A : 1W	K : ±10%	FR : Fuse-resistor
RN : Metal film	3D : 2W	M : ±20%	F : Lead wire forming
RK : Metal mixture	3F : 3W		
	3H : 5W		

*** Resistance**

1 8 2 ⇒ 1800 ohm = 1.8 kohm
2 — Indicates number of zeros after effective number.
1 8 — 2-digit effective number.
• Units: ohm

1 R 2 ⇒ 1.2 ohm
2 — 1-digit effective number.
1 R — 2-digit effective number, decimal point indicated by R.
• Units: ohm

● Capacitors

Ex.: CE 04W 1H 2R2 M BP
Type / Shape and performance / Dielectric strength / Capacity / Allowable error / Others

CE : Aluminum foil electrolytic	0J : 6.3V	F : ±1%	HS : High stability type
CA : Aluminum solid electrolytic	1A : 10V	G : ±2%	BP : Non-polar type
CS : Tantalum electrolytic	1C : 16V	J : ±5%	HR : Ripple-resistant type
CQ : Film	1E : 25V	K : ±10%	DL : For change and discharge
CK : Ceramic	1V : 35V	M : ±20%	HF : For assuring high frequency
CC : Ceramic	1H : 50V	Z : +80% −20%	U : UL part
CP : Oil	2A : 100V	P : +100% −0%	C : CSA part
CM : Mica	2B : 125V	C : ±0.25pF	W : UL-CSA type
CF : Metallized	2C : 160V	D : ±0.5pF	F : Lead wire forming
CH : Metallized	2D : 200V	= : Others	
	2E : 250V		
	2H : 500V		
	2J : 630V		

*** Capacity (electrolyte only)**

2 2 2 ⇒ 2200μF
2 — Indicates number of zeros after effective number.
2 2 — 2-digit effective number.
• Units: μF.

2 R 2 ⇒ 2.2μF
2 — 1-digit effective number.
2 R — 2-digit effective number, decimal point indicated by R.
• Units: μF.

*** Capacity (except electrolyte)**

2 2 2 ⇒ 2200pF=0.0022μF
2 (More than 2) — Indicates number of zeros after effective number.
2 2 — 2-digit effective number.
• Units: μF.

2 2 1 ⇒ 220pF
1 (0 or 1) — Indicates number of zeros after effective number.
2 2 — 2-digit effective number.
• Units: pF.

• When the dielectric strength is indicated in AC, "AC" is included after the dieelectric strength value.

PARTS LIST OF P.W.B. UNIT ASS'Y

GU-3225A MAIN P.W.B. UNIT

Ref. No.	Part No.	Part Name	Remarks
SEMICONDUCTORS GROUP			
IC101	262 2461 902	IC AN8816SB-E1	
IC102	262 2462 901	IC AN8807SB-E1	
IC103	262 2368 005	IC MN662724RPE	
IC104	263 0994 908	IC BA6287F-E2	
IC201	262 2863 005	IC MN102LF61GBA	
IC301	262 2465 005	IC SM5902AF	
IC302	262 2701 905	IC 16M DRAM	
IC303	262 2651 903	IC BU2618FV (E2)	
IC305	262 1883 905	IC TC9246F	
IC401	262 2290 018	IC MN19413A	
IC403,404	262 2701 905	IC 16M DRAM	
IC409	263 0615 902	IC BA15218F	
TR101	272 0025 907	Transistor 2SB562 (C)	
TR102	269 0082 902	Transistor DTC114EK	
TR103	273 0384 900	Transistor 2SC2412K (S)	
D104,105	276 0559 909	Diode DAP202K	
ZD101	276 0462 928	Zener diode HZS6B-3	
ZD301	276 0450 901	Zener diode HZS2B-1	
RESISTORS GROUP			
R101~106	247 0018 905	Carbon chip 0ohm 1/10W	RM73B--0R0K
R107	247 0002 966	Carbon chip 10ohm 1/10W	RM73B--100J
R108,109	247 0018 905	Carbon chip 0ohm 1/10W	RM73B--0R0K
R111	247 0008 902	Carbon chip 1.8kohm 1/10W	RM73B--182J
R112	247 0013 968	Carbon chip 390kohm 1/10W	RM73B--394J
R113	247 0013 942	Carbon chip 330kohm 1/10W	RM73B--334J
R114,115	247 0008 960	Carbon chip 3.3kohm 1/10W	RM73B--332J
R116	247 0010 987	Carbon chip 27kohm 1/10W	RM73B--273J
R117	247 0011 902	Carbon chip 33kohm 1/10W	RM73B--333J
R118	247 0009 927	Carbon chip 5.6kohm 1/10W	RM73B--562J
R119	247 0005 989	Carbon chip 220ohm 1/10W	RM73B--221J
R120	247 0009 927	Carbon chip 5.6kohm 1/10W	RM73B--562J
R121	247 0007 945	Carbon chip 1kohm 1/10W	RM73B--102J
R122	247 0009 901	Carbon chip 4.7kohm 1/10W	RM73B--472J
R123	247 0012 901	Carbon chip 82kohm 1/10W	RM73B--823J
R124	247 0009 985	Carbon chip 10kohm 1/10W	RM73B--103J
R125	247 0011 986	Carbon chip 68kohm 1/10W	RM73B--683J
R126	247 0018 905	Carbon chip 0ohm 1/10W	RM73B--0R0K
R127	247 0011 960	Carbon chip 56kohm 1/10W	RM73B--563J
R128	247 0008 944	Carbon chip 2.7kohm 1/10W	RM73B--272J
R130	247 0011 928	Carbon chip 39kohm 1/10W	RM73B--393J
R131	247 0013 900	Carbon chip 220kohm 1/10W	RM73B--224J
R132	247 0018 905	Carbon chip 0ohm 1/10W	RM73B--0R0K
R133	247 0010 945	Carbon chip 18kohm 1/10W	RM73B--183J
R134	247 0012 927	Carbon chip 100kohm 1/10W	RM73B--104J
R135	247 0011 944	Carbon chip 47kohm 1/10W	RM73B--473J
R136	247 0018 905	Carbon chip 0ohm 1/10W	RM73B--0R0K
R137	247 0011 986	Carbon chip 68kohm 1/10W	RM73B--683J
R138	247 0014 967	Carbon chip 1Mohm 1/10W	RM73B--105J
R139	247 0012 927	Carbon chip 100kohm 1/10W	RM73B--104J
R141	247 0005 918	Carbon chip 110ohm 1/10W	RM73B--111J
R142	247 0007 903	Carbon chip 680ohm 1/10W	RM73B--681J
R143	247 0011 902	Carbon chip 33kohm 1/10W	RM73B--333J
R146~148	247 0003 949	Carbon chip 22ohm 1/10W	RM73B--220J
R152	247 0018 905	Carbon chip 0ohm 1/10W	RM73B--0R0K
R153~155	247 0009 985	Carbon chip 10kohm 1/10W	RM73B--103J
R156	247 0007 945	Carbon chip 1kohm 1/10W	RM73B--102J
R157	247 0009 901	Carbon chip 4.7kohm 1/10W	RM73B--472J
R158	247 0018 905	Carbon chip 0ohm 1/10W	RM73B--0R0K
R201	247 0003 949	Carbon chip 22ohm 1/10W	RM73B--220J
R202~205	247 0009 985	Carbon chip 10kohm 1/10W	RM73B--103J
R207,208	247 0009 985	Carbon chip 10kohm 1/10W	RM73B--103J
R209~221	247 2003 947	Carbon chip 22ohm 1/16W	RM73B--220J
R222,223	247 0003 949	Carbon chip 22ohm 1/10W	RM73B--220J
R224	247 2003 947	Carbon chip 22ohm 1/16W	RM73B--220J
R225	247 0003 949	Carbon chip 22ohm 1/10W	RM73B--220J
R226	247 0004 922	Carbon chip 47ohm 1/10W	RM73B--470J
R227	247 0009 985	Carbon chip 10kohm 1/10W	RM73B--103J
R228	247 0018 905	Carbon chip 0ohm 1/10W	RM73B--0R0K
R229	247 0003 949	Carbon chip 22ohm 1/10W	RM73B--220J
R231	247 0003 949	Carbon chip 22ohm 1/10W	RM73B--220J
R232	247 0009 985	Carbon chip 10kohm 1/10W	RM73B--103J
R233	247 2009 983	Carbon chip 10kohm 1/16W	RM73B--103J
R234	247 0009 985	Carbon chip 10kohm 1/10W	RM73B--103J
R235,236	247 2009 983	Carbon chip 10kohm 1/16W	RM73B--103J
R237	247 0003 949	Carbon chip 22ohm 1/10W	RM73B--220J
R238,239	247 0011 944	Carbon chip 47kohm 1/10W	RM73B--473J
R240~242	247 0009 985	Carbon chip 10kohm 1/10W	RM73B--103J
R243	247 0011 944	Carbon chip 47kohm 1/10W	RM73B--473J
R244	247 0018 905	Carbon chip 0ohm 1/10W	RM73B--0R0K
R245~256	247 2003 947	Carbon chip 22ohm 1/16W	RM73B--220J
R257	247 0018 905	Carbon chip 0ohm 1/10W	RM73B--0R0K
R263	247 0009 985	Carbon chip 10kohm 1/10W	RM73B--103J
R271	247 0014 967	Carbon chip 1Mohm 1/10W	RM73B--105J
R272,273	247 0018 905	Carbon chip 0ohm 1/10W	RM73B--0R0K
R274	247 0009 985	Carbon chip 10kohm 1/10W	RM73B--103J
R276	247 0009 985	Carbon chip 10kohm 1/10W	RM73B--103J
R301	247 0003 949	Carbon chip 22ohm 1/10W	RM73B--220J
R302~311	247 2003 947	Carbon chip 22ohm 1/16W	RM73B--220J
R312	247 0003 949	Carbon chip 22ohm 1/10W	RM73B--220J
R313~316	247 2003 947	Carbon chip 22ohm 1/16W	RM73B--220J
R317	247 0003 949	Carbon chip 22ohm 1/10W	RM73B--220J
R318	247 2003 947	Carbon chip 22ohm 1/16W	RM73B--220J
R319~322	247 0009 985	Carbon chip 10kohm 1/10W	RM73B--103J
R323	247 0005 989	Carbon chip 220ohm 1/10W	RM73B--221J
R324	247 0003 949	Carbon chip 22ohm 1/10W	RM73B--220J
R325,326	247 0018 905	Carbon chip 0ohm 1/10W	RM73B--0R0K
R327~329	247 0003 949	Carbon chip 22ohm 1/10W	RM73B--220J
R331	247 0018 905	Carbon chip 0ohm 1/10W	RM73B--0R0K
R334	247 0009 927	Carbon chip 5.6kohm 1/10W	RM73B--562J
R335	247 0009 985	Carbon chip 10kohm 1/10W	RM73B--103J
R338	247 0009 985	Carbon chip 10kohm 1/10W	RM73B--103J
R343	247 0018 905	Carbon chip 0ohm 1/10W	RM73B--0R0K
R345,346	247 0009 985	Carbon chip 10kohm 1/10W	RM73B--103J
R348	247 0007 987	Carbon chip 1.5kohm 1/10W	RM73B--152J
R349	247 0018 905	Carbon chip 0ohm 1/10W	RM73B--0R0K
R350	247 0018 905	Carbon chip 0ohm 1/10W	RM73B--0R0K
R351	247 0003 949	Carbon chip 22ohm 1/10W	RM73B--220J
R360	247 0003 949	Carbon chip 22ohm 1/10W	RM73B--220J
R362	247 0018 905	Carbon chip 0ohm 1/10W	RM73B--0R0K
R363	247 0004 922	Carbon chip 47ohm 1/10W	RM73B--470J
R367	247 0012 914	Carbon Chip 91kohm 1/10W	RM73B--913J
R369	247 0005 905	Carbon chip 100ohm 1/10W	RM73B--101J
R370	247 0013 939	Carbon chip 300kohm 1/10W	RM73B--304J
R375	247 0018 905	Carbon chip 0ohm 1/10W	RM73B--0R0K
R378	247 0018 905	Carbon chip 0ohm 1/10W	RM73B--0R0K
R401,402	247 0010 990	Carbon chip 30kohm 1/10W	RM73B--303J
R403~406	247 0010 961	Carbon chip 22kohm 1/10W	RM73B--223J
R407~410	247 0008 902	Carbon chip 1.8kohm 1/10W	RM73B--182J
R411~414	247 0008 986	Carbon chip 3.9kohm 1/10W	RM73B--392J
R415~419	247 0018 905	Carbon chip 0ohm 1/10W	RM73B--0R0K
R435	247 0018 905	Carbon chip 0ohm 1/10W	RM73B--0R0K
R437	247 0018 905	Carbon chip 0ohm 1/10W	RM73B--0R0K
R477	247 0018 905	Carbon chip 0ohm 1/10W	RM73B--0R0K
R484,485	247 0004 922	Carbon chip 47ohm 1/10W	RM73B--470J
R486	247 0018 905	Carbon chip 0ohm 1/10W	RM73B--0R0K
R488~509	247 2003 947	Carbon chip 22ohm 1/16W	RM73B--220J
R510	247 0018 905	Carbon chip 0ohm 1/10W	RM73B--0R0K
R515,516	247 0018 905	Carbon chip 0ohm 1/10W	RM73B--0R0K
R521,522	247 0018 905	Carbon chip 0ohm 1/10W	RM73B--0R0K
R525,526	247 0018 905	Carbon chip 0ohm 1/10W	RM73B--0R0K
R531	247 0012 985	Carbon chip 180kohm 1/10W	RM73B--184J
R532	247 0008 931	Carbon chip 2.4kohm 1/10W	RM73B--242J
R533	247 0009 914	Carbon chip 5.1kohm 1/10W	RM73B--512J
R534	247 0018 905	Carbon chip 0ohm 1/10W	RM73B--0R0K
R536	247 0018 905	Carbon chip 0ohm 1/10W	RM73B--0R0K
CAPACITORS GROUP			
C103	254 4299 964	Electrolytic 47μF/16V	CE04W1C470M (SRE)
C104	257 0014 935	Ceramic chip 0.1μF/25V	CK73F1E104Z
C105	254 4538 942	Electrolytic 100μF/16V	CE04W1C101M (SMG/RE3)
C106	257 0014 935	Ceramic chip 0.1μF/25V	CK73F1E104Z
C109	257 3006 911	Metallized chip 0.1μF/16V	CF73=1C104J (ECHU)
C110	254 4299 964	Electrolytic 47μF/16V	CE04W1C470M (SRE)
C111	254 4305 968	Electrolytic 1μF/50V	CE04W1H010M (SRE)
C112	254 4299 964	Electrolytic 47μF/16V	CE04W1C470M (SRE)
C113	257 3006 924	Metallized chip 0.01μF/16V	CF73=1C103J (ECHU)
C114	257 3010 923	Metallized chip 150pF/50V	CF73=1H151J (ECHU)
C115	257 3010 952	Metallized chip 270pF/50V	CF73=1H271J (ECHU)
C116,117	257 3006 911	Metallized chip 0.1μF/16V	CF73=1C104J (ECHU)
C118	257 0001 948	Ceramic chip 2.0 pF/50V	CC73SL1H2R0C
C119	254 4305 968	Electrolytic 1μF/50V	CE04W1H010M (SRE)
C120	257 3010 907	Metallized chip 100pF/50V	CF73=1H101J (ECHU)
C121	257 3014 990	Metallized chip 0.027μF/16V	CF73=1C273J (ECHU)
C122	257 3011 948	Metallized chip 2200pF/50V	CF73=1H222J (ECHU)
C123	257 0002 921	Ceramic chip 10 pF/50V	CC73SL1H100D
C124	256 1059 912	Metallized 0.22μF/50V	CF93A1H224J (JL)
C125	255 1265 923	Mylar film 8200pF/50V	CQ93M1H822J (B)
C127	257 3006 924	Metallized chip 0.01μF/16V	CF73=1C103J (ECHU)
C128	257 3011 948	Metallized chip 2200pF/50V	CF73=1H222J (ECHU)
C130	257 3006 911	Metallized chip 0.1μF/16V	CF73=1C104J (ECHU)
C131	257 3015 928	Metallized chip 0.047μF/16V	CF73=1C473J (ECHU)
C132	257 3014 929	Metallized chip 4700pF/16V	CF73=1C472J (ECHU)
C133	257 3006 924	Metallized chip 0.01μF/16V	CF73=1C103J (ECHU)
C134	254 4213 940	Electrolytic 220μF/6.3V	CE04W0J221M (SRA)
C135	255 1264 982	Mylar film 4700pF/50V	CQ93M1H472J (B)
C136	257 3010 949	Metallized chip 220pF/50V	CF73=1H221J (ECHU)
C137	257 0014 935	Ceramic chip 0.1μF/25V	CK73F1E104Z
C138,139	254 4302 974	Electrolytic 100μF/10V	CE04W1A101M (SRE)
C140	255 1264 924	Mylar film 1500pF/50V	CQ93M1H152J (B)
C141	253 9030 976	Ceramic 0.015μF/25V	CK45=1E153K
C142	257 0014 935	Ceramic chip 0.1μF/25V	CK73F1E104Z
C143	257 3010 994	Metallized chip 560pF/50V	CF73=1H561J (ECHU)
C144	257 3006 924	Metallized chip 0.01μF/16V	CF73=1C103J (ECHU)
C145	254 4299 964	Electrolytic 47μF/16V	CE04W1C470M (SRE)
C146	257 3006 924	Metallized chip 0.01μF/16V	CF73=1C103J (ECHU)
C148,149	255 1265 978	Mylar film 0.022μF/50V	CQ93M1H223J (B)
C150	256 1058 971	Metallized 0.1μF/50V	CF93A1H104J (JL)
C151	256 1059 938	Metallized 0.33μF/50V	CF93A1H334J (JL)
C152	254 4302 974	Electrolytic 100μF/10V	CE04W1A101M (SRE)
C153,154	257 0014 935	Ceramic chip 0.1μF/25V	CK73F1E104Z
C156,157	257 0001 977	Ceramic chip 5.0 pF/50V	CC73SL1H5R0C
C158	254 4299 964	Electrolytic 47μF/16V	CE04W1C470M (SRE)
C159	257 0012 966	Ceramic chip 0.01μF/50V	CK73F1H103Z
C162	257 0012 966	Ceramic chip 0.01μF/50V	CK73F1H103Z
C163	254 4302 974	Electrolytic 100μF/10V	CE04W1A101M (SRE)
C164	257 0012 966	Ceramic chip 0.01μF/50V	CK73F1H103Z
C165	254 4299 964	Electrolytic 47μF/16V	CE04W1C470M (SRE)
C166	257 0014 935	Ceramic chip 0.1μF/25V	CK73F1E104Z
C167	257 0012 966	Ceramic chip 0.01μF/50V	CK73F1H103Z
C168	257 0008 983	Ceramic chip 1000pF/50V	CK73B1H102K
C169	257 0004 961	Ceramic chip 100pF/50V	CC73SL1H101J
C177	257 0002 947	Ceramic chip 12pF/50V	CC73SL1H120J
C192	257 0012 966	Ceramic chip 0.01μF/50V	CK73F1H103Z
C193	257 0008 983	Ceramic chip 1000pF/50V	CK73B1H102K
C194	257 0012 966	Ceramic chip 0.01μF/50V	CK73F1H103Z

Ref. No.	Part No.	Part Name	Remarks
C195	257 0008 983	Ceramic chip 1000pF/50V	CK73B1H102K
C196~198	257 0012 966	Ceramic chip 0.01μF/50V	CK73F1H103Z
C199	257 0008 983	Ceramic chip 1000pF/50V	CK73B1H102K
C201	257 0014 935	Ceramic chip 0.1μF/25V	CK73F1E104Z
C202	254 4299 964	Electrolytic 47μF/16V	CE04W1C470M (SRE)
C203	257 0012 966	Ceramic chip 0.01μF/50V	CK73F1H103Z
C204,205	257 0002 963	Ceramic chip 15pF/50V	CC73SL1H150J
C206	257 0007 900	Ceramic chip 1000pF/50V	CC73SL1H102J
C207	257 0012 966	Ceramic chip 0.01μF/50V	CK73F1H103Z
C208	254 4302 974	Electrolytic 100μF/10V	CE04W1A101M (SRE)
C209	257 3006 924	Metallized chip 0.01μF/16V	CF73=1C103J (ECHU)
C225	254 3068 918	Electrolytic 2.2μF/50V	CE0401H2R2MBP (SRA)
C237	257 3010 949	Metallized chip 220pF/50V	CF73=1H221J (ECHU)
C240	257 0008 983	Ceramic chip 1000pF/50V	CK73B1H102K
C242,243	257 0008 983	Ceramic chip 1000pF/50V	CK73B1H102K
C244	257 0012 966	Ceramic chip 0.01μF/50V	CK73F1H103Z
C245	257 0008 983	Ceramic chip 1000pF/50V	CK73B1H102K
C251~253	257 0014 935	Ceramic chip 0.1μF/25V	CK73F1E104Z
C254	254 4299 964	Electrolytic 47μF/16V	CE04W1C470M (SRE)
C255,256	257 0012 966	Ceramic chip 0.01μF/50V	CK73F1H103Z
C257	257 0014 935	Ceramic chip 0.1μF/25V	CK73F1E104Z
C258	254 4533 950	Electrolytic 470μF/6.3V	CE04W0J471M (SMG/RE3)
C259,260	257 0012 966	Ceramic chip 0.01μF/50V	CK73F1H103Z
C261	257 0014 935	Ceramic chip 0.1μF/25V	CK73F1E104Z
C262	254 4299 964	Electrolytic 47μF/16V	CE04W1C470M (SRE)
C263~266	257 0012 966	Ceramic chip 0.01μF/50V	CK73F1H103Z
C267,268	257 0007 900	Ceramic chip 1000pF/50V	CC73SL1H102J
C282	257 0012 966	Ceramic chip 0.01μF/50V	CK73F1H103Z
C283	257 0008 983	Ceramic chip 1000pF/50V	CK73B1H102K
C289	257 0008 983	Ceramic chip 1000pF/50V	CK73B1H102K
C290	257 0012 966	Ceramic chip 0.01μF/50V	CK73F1H103Z
C291	257 0014 935	Ceramic chip 0.1μF/25V	CK73F1E104Z
C292	257 0008 983	Ceramic chip 1000pF/50V	CK73B1H102K
C293	257 0012 966	Ceramic chip 0.01μF/50V	CK73F1H103Z
C294	257 0014 935	Ceramic chip 0.1μF/25V	CK73F1E104Z
C301	254 4300 989	Electrolytic 330μF/6.3V	CE04W0J331M (SRM)
C302	257 0012 966	Ceramic chip 0.01μF/50V	CK73F1H103Z
C303	257 0008 983	Ceramic chip 1000pF/50V	CK73B1H102K
C304	257 0007 900	Ceramic chip 1000pF/50V	CC73SL1H102J
C307	254 4299 964	Electrolytic 47μF/16V	CE04W1C470M (SRE)
C308	257 0014 935	Ceramic chip 0.1μF/25V	CK73F1E104Z
C309	257 0012 966	Ceramic chip 0.01μF/50V	CK73F1H103Z
C310,311	257 0002 947	Ceramic chip 12pF/50V	CC73SL1H120J
C312	257 0014 935	Ceramic chip 0.1μF/25V	CK73F1E104Z
C313	254 4300 989	Electrolytic 330μF/6.3V	CE04W0J331M (SRM)
C314	257 0012 966	Ceramic chip 0.01μF/50V	CK73F1H103Z
C317	254 4300 989	Electrolytic 330μF/6.3V	CE04W0J331M (SRM)
C318	257 0014 935	Ceramic chip 0.1μF/25V	CK73F1E104Z
C322	257 0014 935	Ceramic chip 0.1μF/25V	CK73F1E104Z
C324	257 0012 966	Ceramic chip 0.01μF/50V	CK73F1H103Z

Ref. No.	Part No.	Part Name	Remarks
C333	257 0004 961	Ceramic chip 100pF/50V	CC73SL1H101J
C338	254 4305 955	Electrolytic 0.68μF/50V	CE04W1HR68M (SRE)
C340	257 0014 935	Ceramic chip 0.1μF/25V	CK73F1E104Z
C345	257 0008 983	Ceramic chip 1000pF/50V	CK73B1H102K
C346	257 0012 966	Ceramic chip 0.01μF/50V	CK73F1H103Z
C347	257 0014 935	Ceramic chip 0.1μF/25V	CK73F1E104Z
C348	257 0012 966	Ceramic chip 0.01μF/50V	CK73F1H103Z
C401,402	254 4299 906	Electrolytic 10μF/16V	CE04W1C100M (SRE)
C403~406	257 0004 945	Ceramic chip 82pF/50V	CC73SL1H820J
C407,408	257 0004 961	Ceramic chip 100pF/50V	CC73SL1H101J
C409,410	254 4299 964	Electrolytic 47μF/16V	CE04W1C470M (SRE)
C411,412	257 0014 935	Ceramic chip 0.1μF/25V	CK73F1E104Z
C431	254 4302 974	Electrolytic 100μF/10V	CE04W1A101M (SRE)
C432,433	257 0014 935	Ceramic chip 0.1μF/25V	CK73F1E104Z
C434	254 4305 968	Electrolytic 1μF/50V	CE04W1H010M (SRE)
C435	254 4299 919	Electrolytic 22μF/16V	CE04W1C220M (SRE)
C436	257 0014 935	Ceramic chip 0.1μF/25V	CK73F1E104Z
C437	254 4299 919	Electrolytic 22μF/16V	CE04W1C220M (SRE)
C440	254 4302 974	Electrolytic 100μF/10V	CE04W1A101M (SRE)
C441	257 0014 935	Ceramic chip 0.1μF/25V	CK73F1E104Z
C442	257 0007 900	Ceramic chip 1000pF/50V	CC73SL1H102J
C443,444	257 0004 961	Ceramic chip 100pF/50V	CC73SL1H101J
C445,446	257 0012 966	Ceramic chip 0.01μF/50V	CK73F1H103Z
C447	257 0007 900	Ceramic chip 1000pF/50V	CC73SL1H102J
C448	257 0012 966	Ceramic chip 0.01μF/50V	CK73F1H103Z
C449	254 4299 964	Electrolytic 47μF/16V	CE04W1C470M (SRE)
C450	257 0014 935	Ceramic chip 0.1μF/25V	CK73F1E104Z
C451	257 0012 966	Ceramic chip 0.01μF/50V	CK73F1H103Z
C452	254 4299 964	Electrolytic 47μF/16V	CE04W1C470M (SRE)
C453	257 0014 935	Ceramic chip 0.1μF/25V	CK73F1E104Z
C454	257 0012 966	Ceramic chip 0.01μF/50V	CK73F1H103Z
C469	257 0007 900	Ceramic chip 1000pF/50V	CC73SL1H102J
C470	257 0012 966	Ceramic chip 0.01μF/50V	CK73F1H103Z
C471~474	254 4300 989	Electrolytic 330μF/6.3V	CE04W0J331M (SRM)
C484	257 0014 935	Ceramic chip 0.1μF/25V	CK73F1E104Z
C485	254 4299 964	Electrolytic 47μF/16V	CE04W1C470M (SRE)
C486	257 0012 966	Ceramic chip 0.01μF/50V	CK73F1H103Z
C487	257 0014 935	Ceramic chip 0.1μF/25V	CK73F1E104Z
C496~498	257 0012 966	Ceramic chip 0.01μF/50V	CK73F1H103Z
C499,500	257 0014 935	Ceramic chip 0.1μF/25V	CK73F1E104Z
C505,506	209 0008 146	Jumper (L=5)	
C511	257 0012 966	Ceramic chip 0.01μF/50V	CK73F1H103Z
C512,513	257 0014 935	Ceramic chip 0.1μF/25V	CK73F1E104Z
C514,515	257 0012 966	Ceramic chip 0.01μF/50V	CK73F1H103Z
C516	257 0008 983	Ceramic chip 1000pF/50V	CK73B1H102K
C521	257 0006 901	Ceramic chip 390pF/50V	CC73SL1H391J
C522	254 4300 989	Electrolytic 330μF/6.3V	CE04W0J331M (SRM)

GU-3226B POWER P.W.B. UNIT

Ref. No.	Part No.	Part Name	Remarks	Q'ty
OTHER PARTS GROUP				
AS201	205 0488 036	32P IC socket		1
CX051	205 0343 058	5P connector base (KR-PH)		1
CX052	205 0321 054	5P connector base (RED)		1
CX061	205 0321 067	6P connector base (RED)		1
CX081	205 0395 080	8P connector base (RED) L		1
CX083	205 0343 087	8P connector base (KR-PH)		1
CX271	205 1138 000	27P FFC connector base (SIDE)		1
FB101	235 0049 900	Beads inductor		1
FB102	235 0106 908	EMI filter (21A05)		1
FB104,105	235 0106 908	EMI filter (21A05)		2
FB125	235 0106 908	EMI filter (21A05)		1
FB126	235 0049 900	Beads inductor		1
FB201	235 0049 900	Beads inductor		1
FB251~260	235 0106 908	EMI filter (21A05)		10
FB261,262	235 0086 905	EMI filter (101)		2
FB301,302	235 0106 908	EMI filter (21A05)		1
FB304,305	235 0106 908	EMI filter (21A05)		2
FB501,502	235 0049 900	Beads inductor		2
FB503	235 0106 908	EMI filter (21A05)		1
JP101	205 0339 004	JM jumper connector		1
L101	235 0060 950	Inductor 10μH		1
L401	235 0107 949	LEM4532T101M		1
TP101	205 0343 061	6P connector base (KR-PH)		1
TP102	205 0343 032	3P connector base (KR-PH)		1
X101	399 0594 005	Crystal 30MHz		1
X201	399 0352 904	Ceramic resonator	CSA20.0MXZ040-TF01	1
X301	399 0595 004	Crystal 8.4672MHz		1
	205 0341 018	3P RE header	for JP101	1

Ref. No.	Part No.	Part Name	Remarks
SEMICONDUCTORS GROUP			
IC601	262 2090 904	IC MAX202CSE	
IC602	262 2739 906	IC S-24C01AFJA	
IC603	262 1346 905	IC TC74HC08AF	
IC604	262 1647 905	IC MN1382-S	
IC608,609	263 0809 006	IC NJM7805FA (S)	
IC611~613	263 0809 006	IC NJM7805FA (S)	
IC614	263 0554 005	IC NJM7905FA	
IC701,702	262 1953 903	IC TC7WU04F	
TR601	272 0083 004	Transistor 2SB1185 (E/F)	
TR602,603	269 0048 904	Transistor DTC143EK	
TR701~704	274 0160 907	Transistor 2SD2144S	
TR705	269 0083 901	Transistor DTA114EK	
TR706	269 0082 902	Transistor DTC114EK	
TR707	269 0083 901	Transistor DTA114EK	
TR708	269 0082 902	Transistor DTC114EK	
D601	276 0559 909	Diode DAP202K	
D604,605	276 0623 000	Diode D3SBA20	
D610,611	276 0550 908	Diode 1SR139-200	
D612	276 0438 949	Diode MA151WK	
D613	276 0438 907	Diode MA151WA	
D614	276 0438 949	Diode MA151WK	
D615	276 0438 907	Diode MA151WA	
D616	276 0438 949	Diode MA151WK	
D617	276 0438 907	Diode MA151WA	
D701,702	276 0432 903	Diode 1SS270A	
ZD601	276 0643 967	Zener diode MTZJ4.3A	
ZD602	276 0645 949	Zener diode MTZJ27A	
LD801	393 9543 907	LED SLR-325VC	Red
LD802,803	393 9589 903	LED SEL1710K	Yellow
RESISTORS GROUP			
R601,602	247 0009 985	Carbon chip 10kohm 1/10W	RM73B--103J
R603	247 0005 905	Carbon chip 100ohm 1/10W	RM73B--101J
R606	247 0009 985	Carbon chip 10kohm 1/10W	RM73B--103J
R607	247 0005 989	Carbon chip 220ohm 1/10W	RM73B--221J
R608	247 0018 905	Carbon chip 0ohm 1/10W	RM73B--0R0K
R609~615	247 0009 985	Carbon chip 10kohm 1/10W	RM73B--103J
R617	247 0008 944	Carbon chip 2.7kohm 1/10W	RM73B--272J
R621~624	247 0007 945	Carbon chip 1kohm 1/10W	RM73B--102J
R701,702	247 0007 903	Carbon chip 680ohm 1/10W	RM73B--681J
R703,704	247 0008 944	Carbon chip 2.7kohm 1/10W	RM73B--272J
R705	247 0009 985	Carbon chip 10kohm 1/10W	RM73B--103J
R706	247 0012 998	Carbon chip 200kohm 1/10W	RM73B--204J

Ref. No.	Part No.	Part Name	Remarks
R707	244 2051 974	Metal oxide 1kohm 1W (NB)	RS14B3A102JNBS (S)
R709	247 0004 977	Carbon chip 75ohm 1/10W	RM73B-750J
R710	247 0014 967	Carbon chip 1Mohm 1/10W	RM73B-105J
R711	247 0004 977	Carbon chip 75ohm 1/10W	RM73B-750J
R713,714	247 0007 903	Carbon chip 680ohm 1/10W	RM73B-681J
R715,716	247 0008 944	Carbon chip 2.7kohm 1/10W	RM73B-272J
R717	247 0009 985	Carbon chip 10kohm 1/10W	RM73B-103J
R718	247 0012 998	Carbon chip 200kohm 1/10W	RM73B-204J
R719	244 2051 974	Metal oxide 1kohm 1W (NB)	RS14B3A102JNBS (S)
R721	247 0004 977	Carbon chip 75ohm 1/10W	RM73B-750J
R722	247 0014 967	Carbon chip 1Mohm 1/10W	RM73B-105J
R723	247 0004 977	Carbon chip 75ohm 1/10W	RM73B-750J
R727,728	247 0018 905	Carbon chip 0ohm 1/10W	RM73B-0R0K
R731,732	247 0018 905	Carbon chip 0ohm 1/10W	RM73B-0R0K
R743	247 0018 905	Carbon chip 0ohm 1/10W	RM73B-0R0K
R745,746	247 0018 905	Carbon chip 0ohm 1/10W	RM73B-0R0K
R748	247 0018 905	Carbon chip 0ohm 1/10W	RM73B-0R0K
R803,804	247 0005 918	Carbon chip 110ohm 1/10W	RM73B-111J
CAPACITORS GROUP			
C601	254 4536 931	Electrolytic 220μF/10V	CE04W1A221M (SMG/RE3)
C602-605	257 0014 935	Ceramic chip 0.1μF/25V	CK73F1E104Z
C606	254 4536 931	Electrolytic 220μF/10V	CE04W1A221M (SMG/RE3)
C607,608	257 0014 935	Ceramic chip 0.1μF/25V	CK73F1E104Z
C611	257 0012 966	Ceramic chip 0.01μF/50V	CK73F1H103Z
C613	257 0012 966	Ceramic chip 0.01μF/50V	CK73F1H103Z
C614	257 0008 983	Ceramic chip 1000pF/50V	CK73B1H102K
C615	254 4538 939	Electrolytic 47μF/16V	CE04W1C470M (SMG/RE3)
C616	257 0012 966	Ceramic chip 0.01μF/50V	CK73F1H103Z
C617	254 4535 929	Electrolytic 47μF/63V	CE04W1J470M (SMG/RE3)
C618	254 4540 707	Electrolytic 330μF/63V	CE04W1J331M (SMG/RE3)
C619-624	257 0014 935	Ceramic chip 0.1μF/25V	CK73F1E104Z
C626	257 0014 935	Ceramic chip 0.1μF/25V	CK73F1E104Z
C627	257 0012 966	Ceramic chip 0.01μF/50V	CK73F1H103Z
C629-632	257 0014 935	Ceramic chip 0.1μF/25V	CK73F1E104Z
C634	257 0014 935	Ceramic chip 0.1μF/25V	CK73F1E104Z
C635	257 0012 966	Ceramic chip 0.01μF/50V	CK73F1H103Z
C637	257 0014 935	Ceramic chip 0.1μF/25V	CK73F1E104Z
C638	254 4538 955	Electrolytic 220μF/16V	CE04W1C221M (SMG/RE3)
C639	257 0014 935	Ceramic chip 0.1μF/25V	CK73F1E104Z
C640	254 4536 931	Electrolytic 220μF/10V	CE04W1A221M (SMG/RE3)
C641	257 0014 935	Ceramic chip 0.1μF/25V	CK73F1E104Z
C642	254 4536 931	Electrolytic 220μF/10V	CE04W1A221M (SMG/RE3)
C643	257 0014 935	Ceramic chip 0.1μF/25V	CK73F1E104Z
C644	254 4538 955	Electrolytic 220μF/16V	CE04W1C221M (SMG/RE3)
C645	257 0014 935	Ceramic chip 0.1μF/25V	CK73F1E104Z
C646	254 4536 931	Electrolytic 220μF/10V	CE04W1A221M (SMG/RE3)
C647	257 0014 935	Ceramic chip 0.1μF/25V	CK73F1E104Z
C648	254 4536 931	Electrolytic 220μF/10V	CE04W1A221M (SMG/RE3)
C649	253 9039 906	Ceramic 0.1μF/25V	CK45=1E104Z
C650	254 4536 931	Electrolytic 220μF/10V	CE04W1A221M (SMG/RE3)

Ref. No.	Part No.	Part Name	Remarks
C651	253 9039 906	Ceramic 0.1μF/25V	CK45=1E104Z
C652	254 4536 931	Electrolytic 220μF/10V	CE04W1A221M (SMG/RE3)
C653,654	257 0014 935	Ceramic chip 0.1μF/25V	CK73F1E104Z
C655	254 4442 708	Electrolytic 6800μF/16V	CE04W1C682M (SMG)
C656	257 0014 935	Ceramic chip 0.1μF/25V	CK73F1E104Z
C657	254 4442 708	Electrolytic 6800μF/16V	CE04W1C682M (SMG)
C658	257 0014 935	Ceramic chip 0.1μF/25V	CK73F1E104Z
C659	254 4539 718	Electrolytic 2200μF/16V	CE04W1C222M (SMG/RE3)
C664	257 0014 935	Ceramic chip 0.1μF/25V	CK73F1E104Z
C665	257 0012 966	Ceramic chip 0.01μF/50V	CK73F1H103Z
C668-671	257 0014 935	Ceramic chip 0.1μF/25V	CK73F1E104Z
C676-681	257 0014 935	Ceramic chip 0.1μF/25V	CK73F1E104Z
C701,702	257 0008 983	Ceramic chip 1000pF/50V	CK73B1H102K
C703	254 4538 955	Electrolytic 220μF/16V	CE04W1C221M (SMG/RE3)
C704	257 0008 983	Ceramic chip 1000pF/50V	CK73B1H102K
C705	254 4536 931	Electrolytic 220μF/10V	CE04W1A221M (SMG/RE3)
C706	257 0012 908	Ceramic chip 1000pF/50V	CK73F1H102Z
C707	257 0012 966	Ceramic chip 0.01μF/50V	CK73F1H103Z
C708	254 4254 925	Electrolytic 33μF/16V	CE04W1C330M
C709	257 0012 966	Ceramic chip 0.01μF/50V	CK73F1H103Z
C710	257 0012 908	Ceramic chip 1000pF/50V	CK73F1H102Z
C711,712	257 0012 966	Ceramic chip 0.01μF/50V	CK73F1H103Z
C713	257 0008 983	Ceramic chip 1000pF/50V	CK73B1H102K
C715	257 0012 966	Ceramic chip 0.01μF/50V	CK73F1H103Z
C716,717	257 0014 935	Ceramic chip 0.1μF/25V	CK73F1E104Z
C719,720	257 0008 983	Ceramic chip 1000pF/50V	CK73B1H102K
C721	254 4538 955	Electrolytic 220μF/16V	CE04W1C221M (SMG/RE3)
C722	257 0008 983	Ceramic chip 1000pF/50V	CK73B1H102K
C723	254 4536 931	Electrolytic 220μF/10V	CE04W1A221M (SMG/RE3)
C724	257 0012 908	Ceramic chip 1000pF/50V	CK73F1H102Z
C725	257 0012 966	Ceramic chip 0.01μF/50V	CK73F1H103Z
C726	254 4254 925	Electrolytic 33μF/16V	CE04W1C330M
C727	257 0012 966	Ceramic chip 0.01μF/50V	CK73F1H103Z
C728	257 0012 908	Ceramic chip 1000pF/50V	CK73F1H102Z
C729,730	257 0012 966	Ceramic chip 0.01μF/50V	CK73F1H103Z
C731	257 0008 983	Ceramic chip 1000pF/50V	CK73B1H102K
C733	257 0012 966	Ceramic chip 0.01μF/50V	CK73F1H103Z
C734-736	257 0014 935	Ceramic chip 0.1μF/25V	CK73F1E104Z
C737	257 0012 966	Ceramic chip 0.01μF/50V	CK73F1H103Z
C738	257 0014 935	Ceramic chip 0.1μF/25V	CK73F1E104Z
C739	257 0012 966	Ceramic chip 0.01μF/50V	CK73F1H103Z
C741,742	257 0014 935	Ceramic chip 0.1μF/25V	CK73F1E104Z
C751	254 4536 931	Electrolytic 220μF/10V	CE04W1A221M (SMG/RE3)
C752-756	257 0014 935	Ceramic chip 0.1μF/25V	CK73F1E104Z
C759	247 0018 905	Carbon chip 0ohm 1/10W	RM73B-0R0KT
C760,761	257 0014 935	Ceramic chip 0.1μF/25V	CK73F1E104Z
C762	257 0012 966	Ceramic chip 0.01μF/50V	CK73F1H103Z
C763-766	257 0014 935	Ceramic chip 0.1μF/25V	CK73F1E104Z
C801-803	257 0014 935	Ceramic chip 0.1μF/25V	CK73F1E104Z
⚠ C851	253 9022 707	Ceramic 0.01μF/250V (AC)	CK45F2EAC103M

GU-3310 REMOTE P.W.B. UNIT

Ref. No.	Part No.	Part Name	Remarks	Q'ty
OTHER PARTS GROUP				
CW031,032	203 4379 022	3P KR-DS connector cord		2
CW071	204 2309 042	7P KR-DS connector cord		1
CX021,022	205 0581 001	2P VH connector base		2
CX031,032	205 0355 033	3P KR connector base (L)		2
CX071	205 0343 074	7P connector base (KR-PH)		1
CX111	205 1135 003	8P MD connector base (F-S)		1
CY021	205 0581 056	2P VH connector base		1
CY081,082	205 0321 083	8P connector base (RED)		2
CY271,272	205 0880 016	27P FFC connector base		2
FF601-603	202 0040 909	Fuse clip		3
FH601-603	202 0040 909	Fuse clip		3
JK701,702	204 8553 009	2P pin jack (FG-ANA)		2
JK703,704	204 8406 020	1P pin jack		2
JK705,706	204 8421 005	Mini jack		2
PT701,702	231 8063 009	Pulse trans.		2
SW801,802	212 5604 907	Tact switch		2
W703	203 0541 003	1P SIN cord Ass'y		1

Ref. No.	Part No.	Part Name	Remarks
SEMICONDUCTORS GROUP			
IC101	262 2463 007	IC MN102L2503	
IC102	GEN 4864	SYSTEM ROM SUB ASS'Y	CAT28F010P-09 (P)
IC103	262 2452 908	IC MN1382-R	
IC201	262 2459 008	IC MN12510F	
IC301	262 2459 008	IC MN12510F	
IC401	262 2090 904	IC MAX202CSE	
TR101,102	272 0081 909	Transistor 2SB766S	
TR201	269 0048 904	Transistor DTC143EK	
TR202,203	269 0082 902	Transistor DTC114EK	
TR301	269 0048 904	Transistor DTC143EK	
TR302,303	269 0082 902	Transistor DTC114EK	
D101	276 0559 909	Diode DAP202K	
D201-214	276 0559 909	Diode DAP202K	
D301-314	276 0559 909	Diode DAP202K	
D401,402	276 0559 909	Diode DAP202K	
FL201	393 8050 006	FLT (9-MT-174GNK)	
FL301	393 8050 006	FLT (9-MT-174GNK)	
LD201	393 9543 910	LED SLR-325MC	Green
LD202	393 9543 923	LED SLR-325DC	Orange
LD204-206	393 9543 907	LED SLR-325VC	Red
LD207	393 9543 923	LED SLR-325DC	Orange
LD208	393 9543 910	LED SLR-325MC	Green
LD210-212	393 9543 910	LED SLR-325MC	Green
LD213	393 9543 923	LED SLR-325DC	Orange
LD301	393 9543 910	LED SLR-325MC	Green
LD302	393 9543 923	LED SLR-325DC	Orange
LD304-306	393 9543 907	LED SLR-325VC	Red
LD307	393 9543 923	LED SLR-325DC	Orange
LD308	393 9543 910	LED SLR-325MC	Green
LD310-312	393 9543 910	LED SLR-325MC	Green
LD313	393 9543 923	LED SLR-325DC	Orange

Ref. No.	Part No.	Part Name	Remarks
RESISTORS GROUP			
R101~112	247 2009 983	Carbon chip 10kohm 1/16W	RM73B--103J
R113	247 2005 987	Carbon chip 220ohm 1/16W	RM73B--221J
R114~116	247 2009 983	Carbon chip 10kohm 1/16W	RM73B--103J
R118	247 2007 943	Carbon chip 1kohm 1/16W	RM73B--102J
R120	247 2009 983	Carbon chip 10kohm 1/16W	RM73B--103J
R121,122	247 2006 902	Carbon chip 330ohm 1/16W	RM73B--331J
R123,124	247 2007 943	Carbon chip 1kohm 1/16W	RM73B--102J
R125~128	247 2009 983	Carbon chip 10kohm 1/16W	RM73B--103J
R129,130	247 2011 942	Carbon chip 47kohm 1/16W	RM73B--473J
R131~134	247 2009 983	Carbon chip 10kohm 1/16W	RM73B--103J
R135~138	247 2012 925	Carbon chip 100kohm 1/16W	RM73B--104J
R139~144	247 2009 983	Carbon chip 10kohm 1/16W	RM73B--103J
R146	247 2018 903	Carbon chip 0ohm 1/16W	RM73B--0R0K
R147	247 2011 942	Carbon chip 47kohm 1/16W	RM73B--473J
R148~174	247 2003 947	Carbon chip 22ohm 1/16W	RM73B--220J
R175,176	247 2018 903	Carbon chip 0ohm 1/16W	RM73B--0R0K
R203~209	247 2012 925	Carbon chip 100kohm 1/16W	RM73B--104J
R210	247 2003 947	Carbon chip 22ohm 1/16W	RM73B--220J
R211,212	247 2018 903	Carbon chip 0ohm 1/16W	RM73B--0R0K
R213,214	247 2006 944	Carbon chip 390ohm 1/16W	RM73B--391J
R216,217	247 2005 945	Carbon chip 150ohm 1/16W	RM73B--151J
R218,219	247 2005 974	Carbon chip 200ohm 1/16W	RM73B--201J
R220	247 2006 944	Carbon chip 390ohm 1/16W	RM73B--391J
R222,223	247 2005 929	Carbon chip 120ohm 1/16W	RM73B--121J
R224,225	247 2005 974	Carbon chip 200ohm 1/16W	RM73B--201J
R227,228	247 2012 925	Carbon chip 100kohm 1/16W	RM73B--104J
R303~309	247 2012 925	Carbon chip 100kohm 1/16W	RM73B--104J
R312	247 2018 903	Carbon chip 0ohm 1/16W	RM73B--0R0K
R313,314	247 2006 944	Carbon chip 390ohm 1/16W	RM73B--391J
R316,317	247 2005 425	Carbon chip 150ohm 1/16W	RM73B--151J
R318,319	247 2005 974	Carbon chip 200ohm 1/16W	RM73B--201J
R320	247 2006 944	Carbon chip 390ohm 1/16W	RM73B--391J
R322,323	247 2005 929	Carbon chip 120ohm 1/16W	RM73B--121J
R324,325	247 2005 974	Carbon chip 200ohm 1/16W	RM73B--201J
R327,328	247 2012 925	Carbon chip 100kohm 1/16W	RM73B--104J
R401~403	247 2003 947	Carbon chip 22ohm 1/16W	RM73B--220J
R405	247 2018 903	Carbon chip 0ohm 1/16W	RM73B--0R0K
R406	247 2005 987	Carbon chip 220ohm 1/16W	RM73B--221J
R407,408	247 2003 947	Carbon chip 22ohm 1/16W	RM73B--220J
R409,410	247 2018 903	Carbon chip 0ohm 1/16W	RM73B--0R0K
R411,412	247 2003 947	Carbon chip 22ohm 1/16W	RM73B--220J
R800~804	247 2018 903	Carbon chip 0ohm 1/16W	RM73B--0R0K
R807	247 2018 903	Carbon chip 0ohm 1/16W	RM73B--0R0K
R812~820	247 2018 903	Carbon chip 0ohm 1/16W	RM73B--0R0K
R826~831	247 2018 903	Carbon chip 0ohm 1/16W	RM73B--0R0K
R835~850	247 2018 903	Carbon chip 0ohm 1/16W	RM73B--0R0K

Ref. No.	Part No.	Part Name	Remarks
R900~904	247 2018 903	Carbon chip 0ohm 1/16W	RM73B--0R0K
R907	247 2018 903	Carbon chip 0ohm 1/16W	RM73B--0R0K
R912~920	247 2018 903	Carbon chip 0ohm 1/16W	RM73B--0R0K
R926~931	247 2018 903	Carbon chip 0ohm 1/16W	RM73B--0R0K
R935~950	247 2018 903	Carbon chip 0ohm 1/16W	RM73B--0R0K
VR201	211 0908 003	Slide volume	
VR301	211 0908 003	Slide volume	
CAPACITORS GROUP			
C101	257 0512 903	Ceramic chip 0.1μF/25V	CK73F1E104Z
C102	257 0511 904	Ceramic chip 0.01μF/50V	CK73F1H103Z
C103	254 4536 931	Electrolytic 220μF/10V	CE04W1A221M (SMG/RE3)
C104	254 4538 939	Electrolytic 47μF/16V	CE04W1C470M (SMG/RE3)
C105	257 0501 901	Ceramic chip 0.01μF/50V	CK73B1H103K
C106	257 0512 903	Ceramic chip 0.1μF/25V	CK73F1E104Z
C107	254 4536 931	Electrolytic 220μF/10V	CE04W1A221M (SMG/RE3)
C108	257 0512 903	Ceramic chip 0.1μF/25V	CK73F1E104Z
C109	257 0511 904	Ceramic chip 0.01μF/50V	CK73F1H103Z
C110,111	257 0504 966	Ceramic chip 39pF/50V	CC73CH1H390J
C112~117	257 0512 903	Ceramic chip 0.1μF/25V	CK73F1E104Z
C118	254 4536 931	Electrolytic 220μF/10V	CE04W1A221M (SMG/RE3)
C119	257 0511 904	Ceramic chip 0.01μF/50V	CK73F1H103Z
C120,121	257 0512 903	Ceramic chip 0.1μF/25V	CK73F1E104Z
C122	257 0511 904	Ceramic chip 0.01μF/50V	CK73F1H103Z
C124	257 0501 901	Ceramic chip 0.01μF/50V	CK73B1H103K
C201	257 0511 920	Ceramic chip 0.047μF/50V	CK73F1H473Z
C202	257 0512 903	Ceramic chip 0.1μF/25V	CK73F1E104Z
C204	257 0511 904	Ceramic chip 0.01μF/50V	CK73F1H103Z
C205	257 0503 925	Ceramic chip 10pF/50V	CC73CH1H100D
C208,209	257 0504 982	Ceramic chip 47pF/50V	CC73CH1H470J
C212	257 0511 920	Ceramic chip 0.047μF/50V	CK73F1H473Z
C213	254 4302 974	Electrolytic 100μF/10V	CE04W1A101M (SRE)
C214	257 0511 904	Ceramic chip 0.01μF/50V	CK73F1H103Z
C215	257 0509 929	Ceramic chip 1000pF/50V	CK73B1H102K
C216	257 0512 903	Ceramic chip 0.1μF/25V	CK73F1E104Z
C217,218	257 0511 920	Ceramic chip 0.047μF/50V	CK73F1H473Z
C219	257 0512 903	Ceramic chip 0.1μF/25V	CK73F1E104Z
C220,221	257 0511 920	Ceramic chip 0.047μF/50V	CK73F1H473Z
C222	257 0511 904	Ceramic chip 0.01μF/50V	CK73F1H103Z
C223	257 0512 903	Ceramic chip 0.1μF/25V	CK73F1E104Z
C224	257 0511 904	Ceramic chip 0.01μF/50V	CK73F1H103Z
C225	257 0512 903	Ceramic chip 0.1μF/25V	CK73F1E104Z
C226	257 0511 904	Ceramic chip 0.01μF/50V	CK73F1H103Z
C227	257 0512 903	Ceramic chip 0.1μF/25V	CK73F1E104Z
C301	257 0511 920	Ceramic chip 0.047μF/50V	CK73F1H473Z
C302	257 0512 903	Ceramic chip 0.1μF/25V	CK73F1E104Z
C305	257 0503 925	Ceramic chip 10pF/50V	CC73CH1H100D
C308,309	257 0504 982	Ceramic chip 47pF/50V	CC73CH1H470J
C312	257 0511 920	Ceramic chip 0.047μF/50V	CK73F1H473Z

Ref. No.	Part No.	Part Name	Remarks
C313	254 4302 974	Electrolytic 100μF/10V	CE04W1A101M (SRE)
C314	257 0511 904	Ceramic chip 0.01μF/50V	CK73F1H103Z
C315	257 0509 929	Ceramic chip 1000pF/50V	CK73B1H102K
C316	257 0512 903	Ceramic chip 0.1μF/25V	CK73F1E104Z
C317,318	257 0511 920	Ceramic chip 0.047μF/50V	CK73F1H473Z
C319	257 0512 903	Ceramic chip 0.1μF/25V	CK73F1E104Z
C320,321	257 0511 920	Ceramic chip 0.047μF/50V	CK73F1H473Z
C322	257 0511 904	Ceramic chip 0.01μF/50V	CK73F1H103Z
C323	257 0512 903	Ceramic chip 0.1μF/25V	CK73F1E104Z
C324	257 0511 904	Ceramic chip 0.01μF/50V	CK73F1H103Z
C325	257 0512 903	Ceramic chip 0.1μF/25V	CK73F1E104Z
C326	257 0511 904	Ceramic chip 0.01μF/50V	CK73F1H103Z
C327	257 0512 903	Ceramic chip 0.1μF/25V	CK73F1E104Z
C401~404	257 0512 903	Ceramic chip 0.1μF/25V	CK73F1E104Z
C405	257 0511 904	Ceramic chip 0.01μF/50V	CK73F1H103Z
C406	257 0512 903	Ceramic chip 0.1μF/25V	CK73F1E104Z
C407	254 4536 931	Electrolytic 220μF/10V	CE04W1A221M (SMG/RE3)
C409	257 0512 903	Ceramic chip 0.1μF/25V	CK73F1E104Z
C410,411	257 0511 904	Ceramic chip 0.01μF/50V	CK73F1H103Z
C412	257 0509 929	Ceramic chip 1000pF/50V	CK73B1H102K
C413	257 0512 903	Ceramic chip 0.1μF/25V	CK73F1E104Z
C414	257 0511 904	Ceramic chip 0.01μF/50V	CK73F1H103Z
C415	254 4522 945	Electrolytic 47μF/35V	CE04W1V470M (SMG/RE3)
C416	254 4536 931	Electrolytic 220μF/10V	CE04W1A221M (SMG/RE3)
C419,420	257 0512 903	Ceramic chip 0.1μF/25V	CK73F1E104Z
C422	257 0512 903	Ceramic chip 0.1μF/25V	CK73F1E104Z
C423	257 0511 904	Ceramic chip 0.01μF/50V	CK73F1H103Z

Ref. No.	Part No.	Part Name	Remarks	Q'ty
OTHER PARTS GROUP				
AS102	205 0488 036	32P IC socket	for IC102	1
CX111	205 1135 003	8P MD connector base (F-S)		1
CX121,122	205 0850 059	12P connector base (BTMK-P)		2
CX141,142	205 0850 062	14P connector base (BTMK-P)		2
CX143~145	205 0806 061	14P connector base (9115)		3
CY121,122	205 0849 057	12P connector base (BTMK-S)		2
CY141,142	205 0849 060	14P connector base (BTMK-S)		2
CY143~145	205 0805 062	14P connector socket (9176)		3
FB201	235 0130 903	EMI filter (11A121)		1
FB301	235 0130 903	EMI filter (11A121)		1
FB401,402	235 0130 903	EMI filter (11A121)		2
FB403~407	235 0049 900	Beads inductor		5
FB408~410	235 0130 903	EMI filter (11A121)		3
JK401,402	204 8421 005	Mini jack		2
S201~216	212 5604 907	Tact switch		16
S217	212 0438 000	Jog-shuttle		1
S218	212 0410 002	Rotary encorder-JOG		1
S301~316	212 5604 907	Tact switch		16
S317	212 0438 000	Jog-shuttle		1
S318	212 0410 002	Rotary encorder-JOG		1
W401	203 0497 018	1P contact Ass'y		1
X101	399 0219 021	Crystal 12.288MHz		1
X201	399 0661 909	Ceramic resonator	CSTS4.00MG06	1
	461 0984 017	FL spacer		2
	513 8013 003	P-ROM seal	for IC102	1

PARTS LIST OF RC-48 REMOTE CONTROL UNIT

Ref. No.	Part No.	Part Name	Remarks	Q'ty
1	GU-3310	Remote P.W.B. unit Ass'y		1
1-1		Display1 unit		
1-2		Display2 unit		
1-3		CPU unit		
1-4		Connect unit		
1-5		Junction unit		
2	441 1931 007	RC front sub panel		1
3	144 2724 008	RC front panel		1
4	143 1072 004	Lens		14
5	146 2208 009	Window		2
6	119 0106 004	Rubber key (PLAY/PAUSE)		2
7	119 0107 003	Rubber key (PITCH BEND)		2
8	119 0108 002	Rubber key (OPEN/CLOSE)		2
9	105 1350 106	Cover		1
10	104 0270 006	Foot		4
11	112 0863 003	Shuttle ring		2
12	112 0862 004	Jog dial		2
13	112 0820 017	Knob (Maru)		2
14	113 1840 109	Slide knob		2
15	146 2222 001	Shield cover		2
SCREWS & NUTS				
101	471 1832 000	Screw M3 SEMS		1
102	471 9050 020	Screw 3×6 FHHS MFZNII-B		6
103	473 7002 005	Screw 3×6 CBTS (S)-Z		20
104	471 8010 113	Special screw		4
105	475 1178 009	Washer 3W-B		6

EXPLODED VIEW OF RC-48 REMOTE CONTROL UNIT

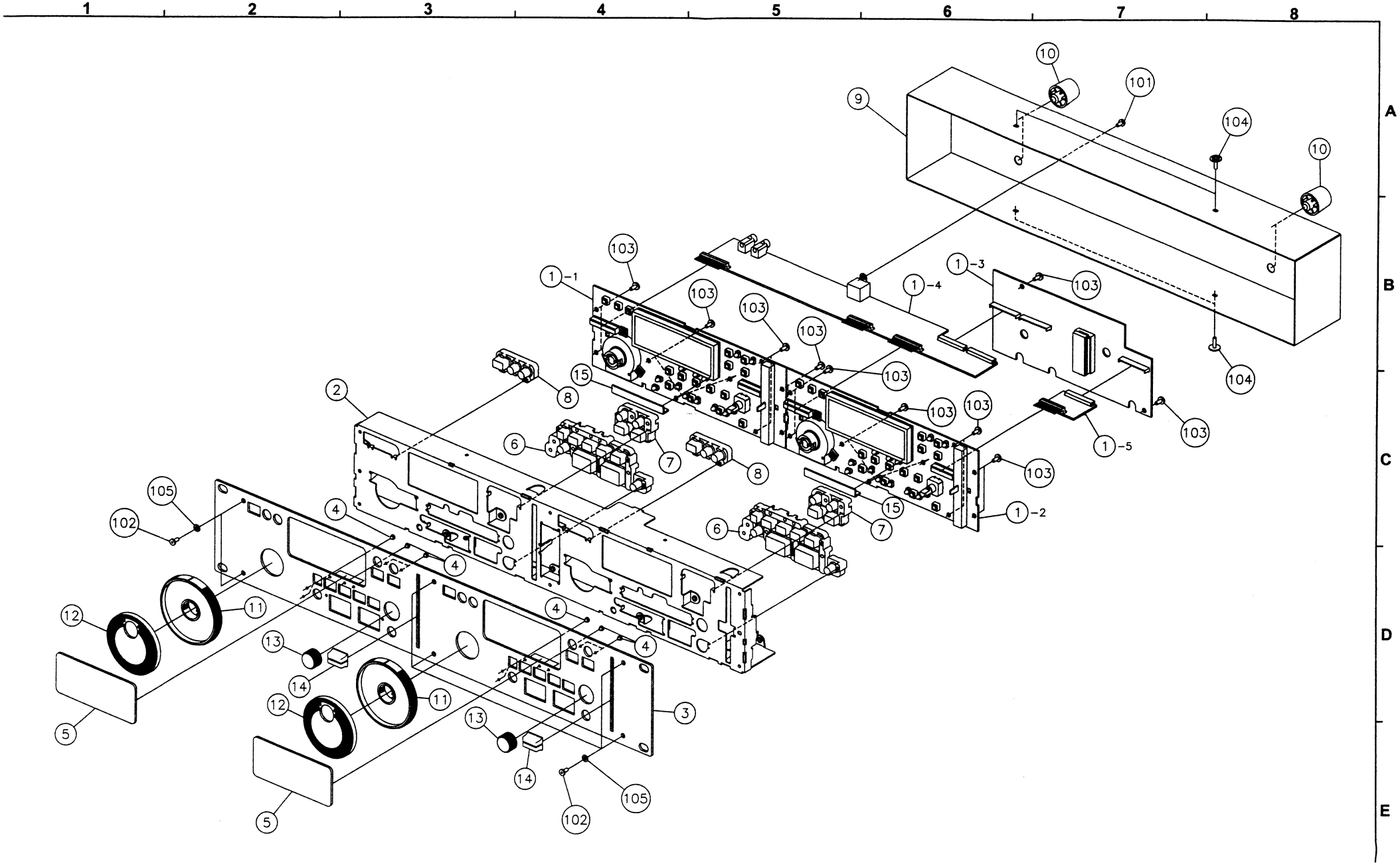

EXPLODED VIEW OF CHASSIS AND CABINET

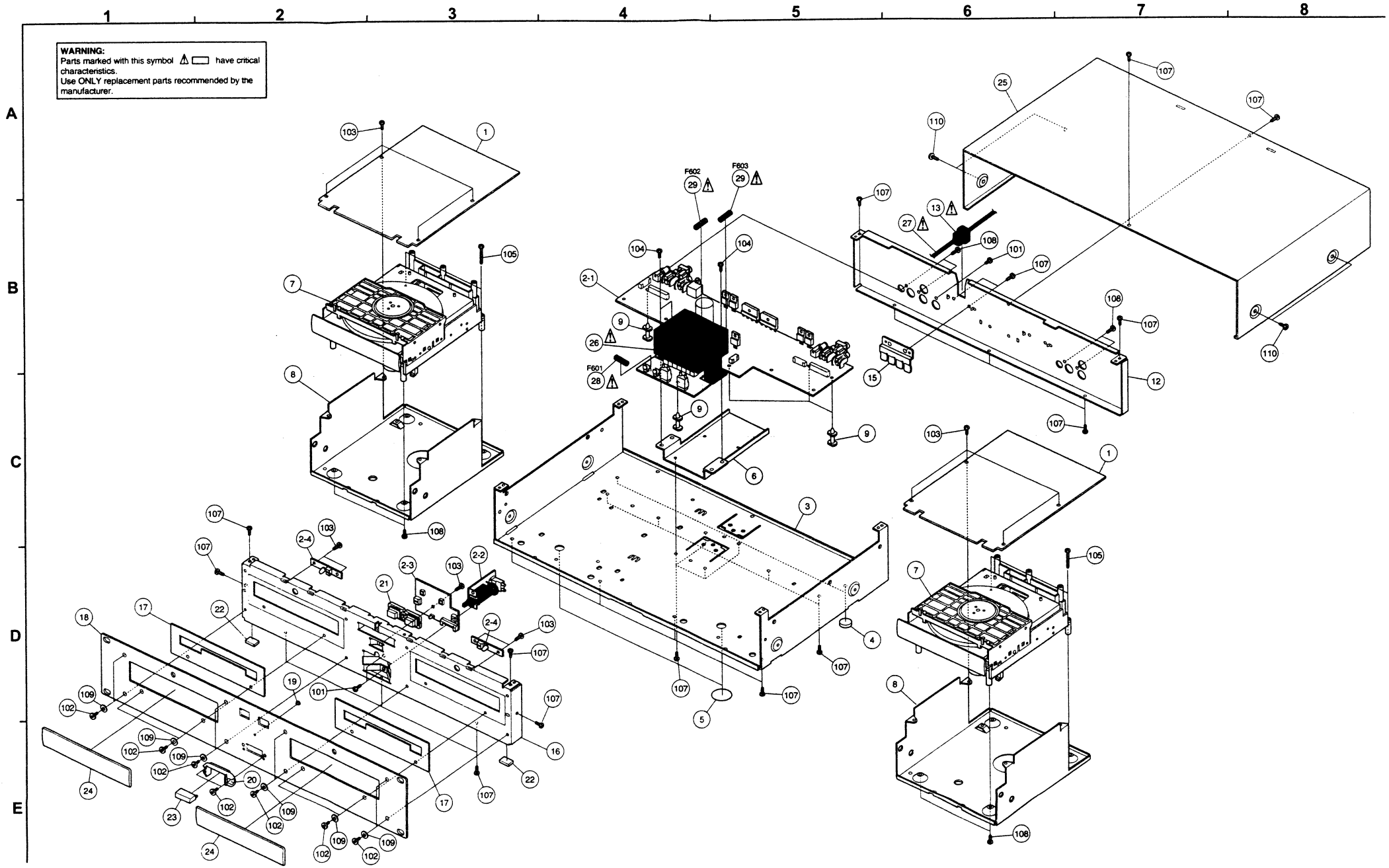

PARTS LIST OF EXPLODED VIEW

Note: The symbols in the column "Remarks" indicate the following destinations.
E3: U.S.A./Canada model E2: Europe model EK: U.K. model

Ref. No.	Part No.	Part Name	Remarks	Q'ty
1	GU-3225A	Main P.W.B. unit Ass'y		2
2	GU-3226B	Power P.W.B. unit Ass'y		1
2-1		Power unit		
2-2		P. SW. unit		
2-3		OP/CL SW. unit		
2-4		LED unit		
3	411 1923 001	Chassis		1
4	461 0706 127	Foot sheet		2
5	513 3175 001	Blind label		2
6	412 4343 102	Trans. bracket		1
7	337 0059 102	CD mecha. unit (CD93F8)		2
8	412 4560 105	Mecha. bracket		2
9	412 2814 086	Card spacer (L=14.8)		5
12	105 1324 239	Back panel		1
13	445 0084 009	Cord bush	for E3	1
13	445 0056 008	Cord bush	for E2/EK	1
15	412 9371 001	Spring plate		1
16	441 1919 003	Front sub panel		1
17	415 0831 109	Blind sheet		2
18	144 2683 026	Front panel		1
19	146 1371 005	LED window		1
20	146 1661 016	Power SW. protector		1
21	119 0069 125	Rubber key (B)		1
22	461 0740 002	Sheet		2
23	113 1357 207	P. SW. knob		1
24	146 2067 101	Loader panel		2
25	102 0425 253	Top cover		1
⚠ 26	233 0597 003	Power trans		1
⚠ 27	206 2155 001	AC cord with connector E3	for E3	1
⚠ 27	206 2089 106	AC cord with connector E2	for E2	1
⚠ 27	206 2128 009	AC cord with connector EK	for EK	1
⚠ 28	206 1039 005	Fuse 630mA	F601, for E3	1
⚠ 28	206 1015 045	Fuse 315mA	F601, for E2/EK	1
⚠ 29	206 1039 076	Fuse 2.5A	F602/603, for E3	2
⚠ 29	206 1015 032	Fuse 2.5A	F602/603, for E2/EK	2
★ 31	445 8028 009	Cord holder		1
★ 32	445 0033 005	Wire clamp band		2
★ 33	203 8440 025	5P PH-PH connector cord	CX051 to Mecha.	2
★ 34	204 2469 050	8P PH-PH connector cord	CX083 to Mecha.	2
★ 35	204 0479 042	6P connector cord (Red)	CX061 to Mecha.	2
★ 36	203 8440 038	5P PH-PH connector cord (Red)	CX052 to Mecha.	2
★ 37	009 0133 042	27P FFC	CX271 to CY271	2
★ 38	204 2661 049	8P PH-PH connector cord	CX081 to CY081	2
★ 39	203 5132 080	3P VH connector cord	CX021 to CY021	1
★ 40	513 2065 002	E2 laser caution	for E2	2
★ 41	513 3465 009	Fuse label (E3)	for F601, for E3	1
★ 41	513 3402 033	Fuse label	for F601, for E2/EK	1
★ 42	513 3465 012	Fuse label (E3)	for F602/603, for E3	2
★ 42	513 3402 046	Fuse label	for F602/603, for E2/EK	2
★ 45	513 3499 017	Rating sheet	for E3	1
★ 45	513 3499 004	Rating sheet	for E2/EK	1
★ 46	513 2303 007	Version label		1
★ 47	513 2728 006	Caution sheet (PU)		1
★ 48	513 1519 009	Manufacture date label	for E3	1
★ 49	513 2521 009	CE label	for E2/EK	1
★ 50	513 3160 100	E3 label	for E3	1
★ 51	513 0985 003	inst. label	for E2/EK	1
★ 52	513 3384 009	C-UL mark US (813)	for E3	1
★ 53	513 3253 004	C-TICK label	for E2/EK	1
★ 54	513 3159 001	FCC/class B caution	for E3	1

SCREWS & NUTS

Ref. No.	Part No.	Part Name	Remarks	Q'ty
101	471 3303 029	Screw 3×6 CBS-B		3
102	471 9050 020	Screw 3×6 FHHS MFZNII-B		14
103	473 7002 005	Screw 3×6 CBTS (S)-Z		13
104	473 7004 003	Screw 4×8 CBTS (S)-Z		4
105	473 7005 057	Screw 3×25 CBTS (S)-Z		4
107	473 7015 018	Screw 3×8 CBTS (S)-B		28
108	473 7508 017	Screw 3×10 CBTS (P)-B		8
109	475 1178 009	Washer 3W-B		12
110	477 0263 005	3P. swelling screw		4

PARTS LIST OF MECHANISM UNIT (CD93F8)

Ref. No.	Part No.	Part Name	Remarks	Q'ty
Loading Mechanism Section				
1	964 0001 004	PCB switch Ass'y		1
1-1	964 0003 507	Push switch	SW01	1
1-2	964 0003 400	Leaf switch	SW02	1
3	964 0001 101	Frame chassis		1
4	964 0001 208	Magnet plate		1
5	964 0001 305	Rail left Ass'y		1
6	964 0001 402	Rail right		1
7	964 0001 509	Chassis stopper		1
8	964 0001 606	Magnet support		1
9	964 0001 703	Rubber cushion (Blue)		2
10	964 0001 800	Rubber cushion (Purple)		2
11	964 0001 907	Magnet holder		1
12	964 0002 003	Sheet		1
13	964 0002 100	Loading gear		1
14	964 0002 207	Lifter gear		1
15	964 0002 304	Idler gear A		1
16	964 0002 401	Idler gear B		1
17	964 0002 508	Pulley motor		1
18	964 0002 605	Pulley gear		1
19	964 0002 702	Square belt		1
20	964 0002 809	Disk clamp magnet		1
21	964 0002 906	Lifter mecha		1
22	964 0003 002	Slide lifter		1
23	964 0003 109	Table loading		1
24	964 0003 206	Motor, 3.0V, 0.3W		1
101	964 0003 303	Loading moter Ass'y		1
102	964 0005 013	Traverse unit		1
30	944 0025 219	Screw 3×8		1
31	944 0056 013	Screw 2.6×8		4
32	944 0048 384	Screw 2×6		2
33	964 0004 001	Screw 1.7×3.5		2
34	964 0004 108	Special screw		1
35	964 0004 205	Screw 3×8		1
36	964 0004 302	Screw 2.6×8		1
Traverse Section				
1	964 0005 107	Laser pickup		1
2	–	Chassis Ass'y		1
3	–	Turntable Ass'y		1
4	964 0005 204	Guide bar		1
5	964 0005 301	Middle gear		1
6	964 0005 408	Motor gear		1
7	964 0005 505	Power gear		1
8	964 0005 602	Rack plate		1
9	964 0005 709	PCB morter		1
10	–	Motor, 2.0V,0.2W (Spindle Motor)		1
11	–	Motor, 3.0V,0.3W (Sled Moter)		1
12	964 0005 806	Leaf switch		1
13	964 0005 903	Pickup shaft		1

Ref. No.	Part No.	Part Name	Remarks	Q'ty
201	964 0007 011	Motor chassis Ass'y		1
202	964 0007 105	Motor Ass'y		1
20	964 0006 009	Screw 2×5		2
21	964 0006 106	Screw 1.7×2.5		4
22	964 0006 203	Special screw		4

EXPLODED VIEW OF CD MECHANISM UNIT

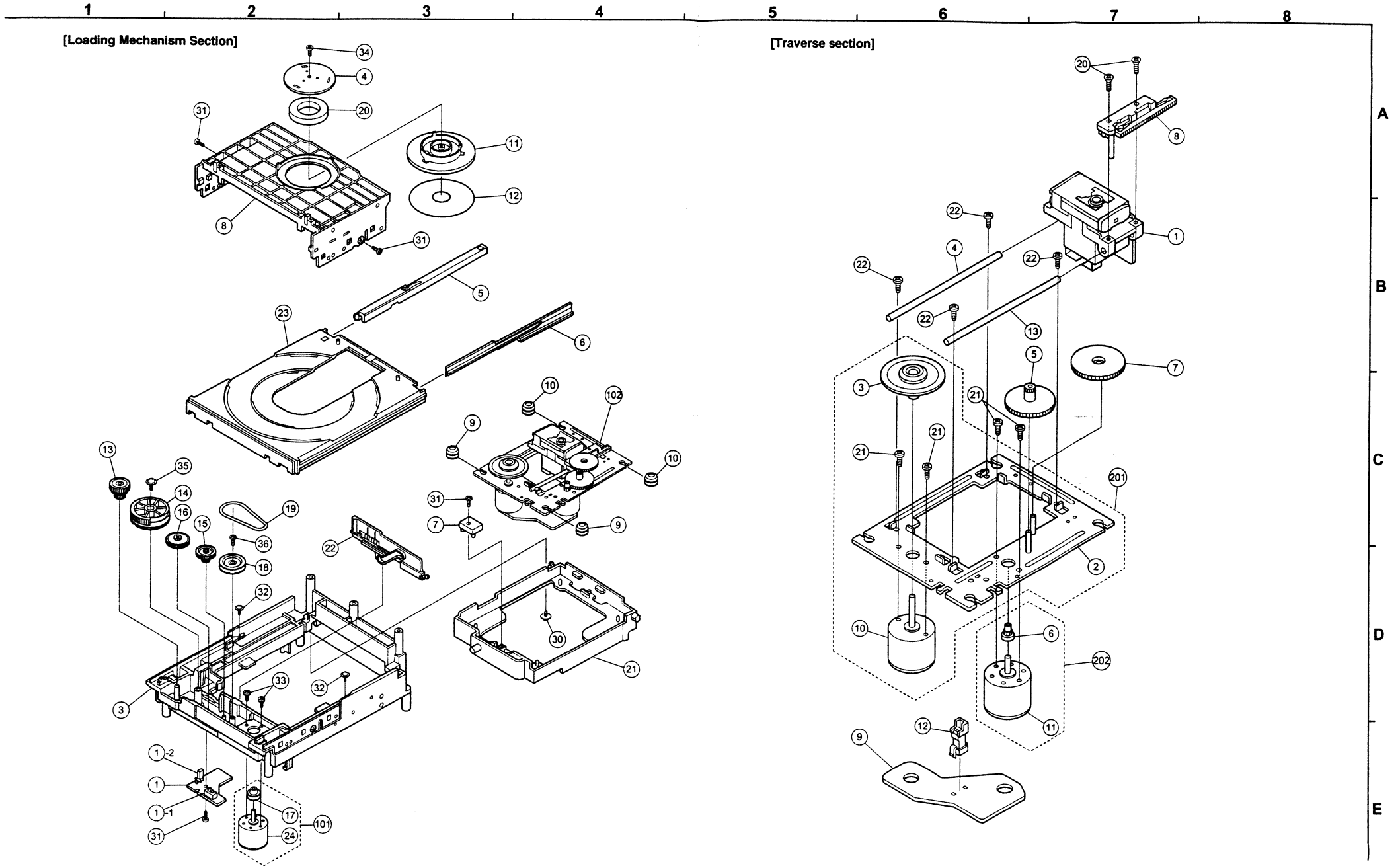

PACKING VIEW

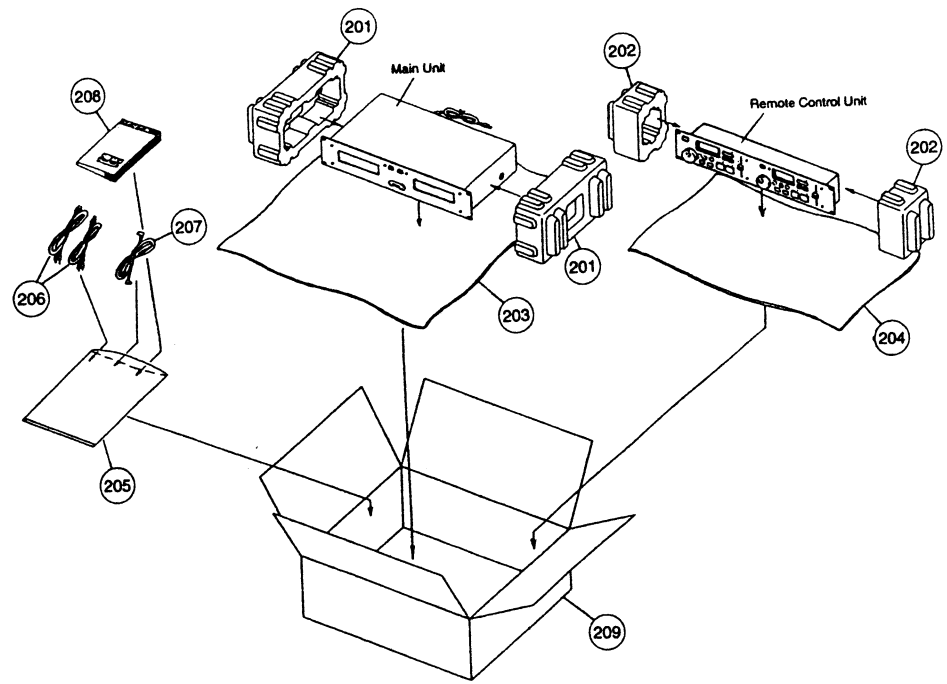

PARTS LIST OF PACKING & ACCESSORIES

Note: The symbols in the column "Remarks" indicate the following destinations.
E3: U.S.A./Canada model E2: Europe model EK: U.K. model

Ref. No.	Part No.	Part Name	Remarks	Q'ty
201	503 1001 400	Cushion	for main unit	2
202	503 1010 404	Cushion (RC)	for remote control unit	2
203	505 0102 092	Stylen paper	for main unit	1
204	505 0102 021	Stylen paper	for remote control unit	1
205	505 0038 030	Poly. cover		1
206	203 2360 004	2P pin cord		2
207	204 2869 003	8P MD connector cord (L)		1

Ref. No.	Part No.	Part Name	Remarks	Q'ty
208	511 3677 008	Instruction manual		1
209	501 2103 000	Carton case		1
★ 210	513 3348 126	Caution label (Cord)		1
★ 211	513 2303 007	Version label		2
★ 212	515 0692 101	DEL warranty com.	for E3	1
★ 213	—	Control card		1
★ 214	—	Bar code label		1

BLOCK DIAGRAM

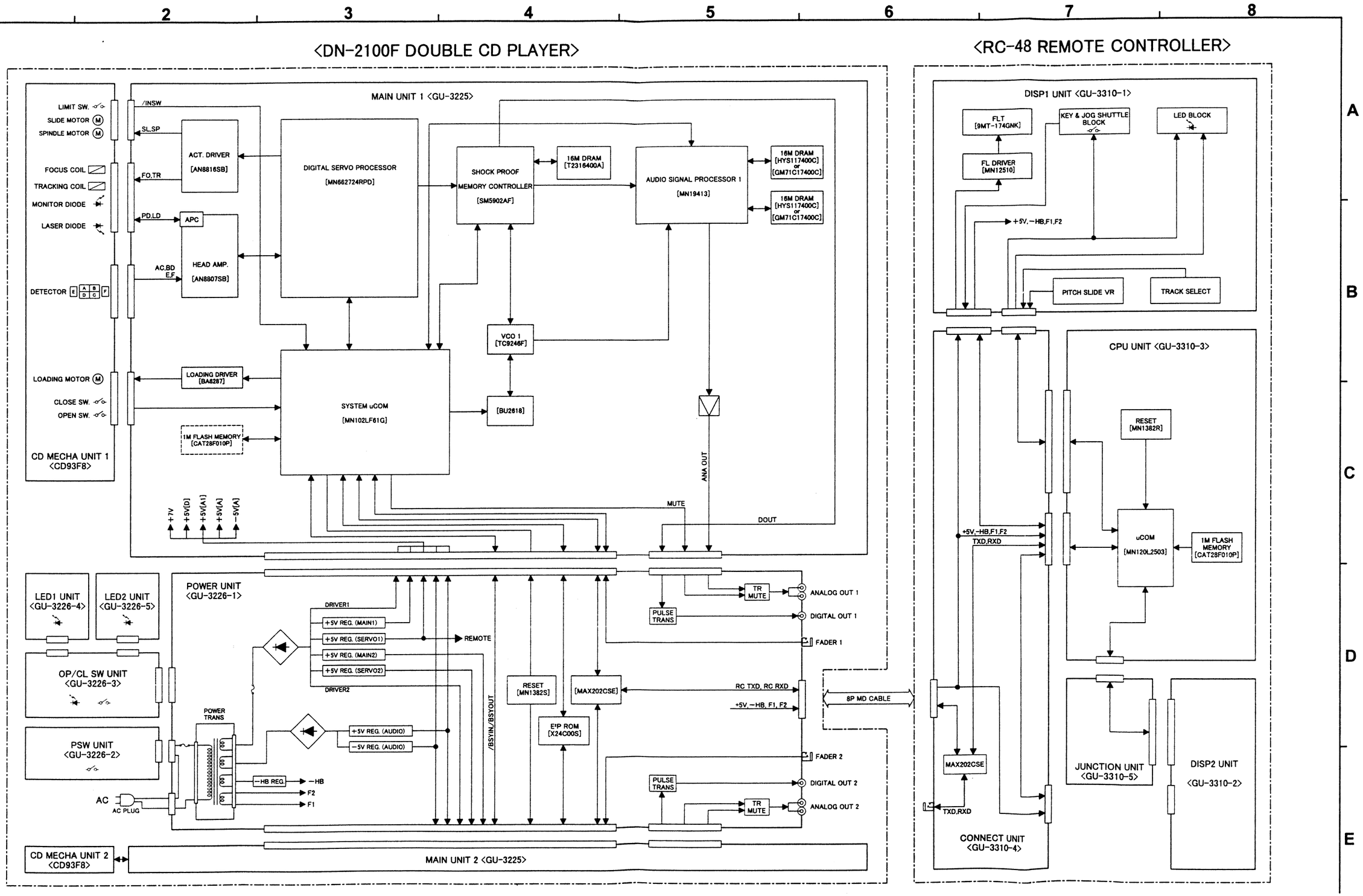

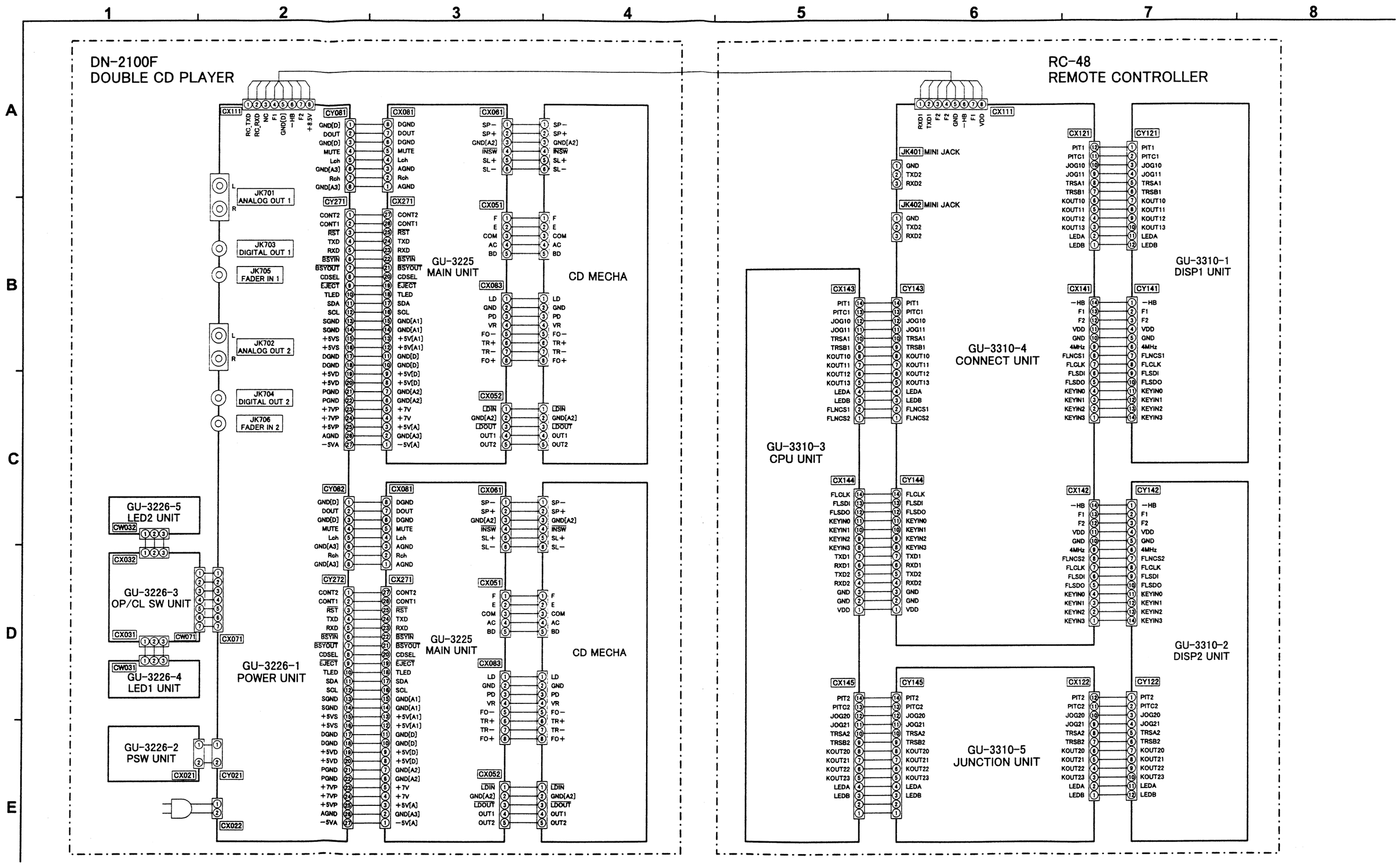
DN-2100F
DOUBLE CD PLAYER
RC-48
REMOTE CONTROLLER
GU-3225
MAIN UNIT
CD MECHA
GU-3226-1
POWER UNIT
GU-3226-5
LED2 UNIT
GU-3226-3
OP/CL SW UNIT
GU-3226-4
LED1 UNIT
GU-3226-2
PSW UNIT
JK701
ANALOG OUT 1
JK703
DIGITAL OUT 1
JK705
FADER IN 1
JK702
ANALOG OUT 2
JK704
DIGITAL OUT 2
JK706
FADER IN 2
JK401 MINI JACK
JK402 MINI JACK
GU-3310-1
DISP1 UNIT
GU-3310-4
CONNECT UNIT
GU-3310-3
CPU UNIT
GU-3310-2
DISP2 UNIT
GU-3310-5
JUNCTION UNIT

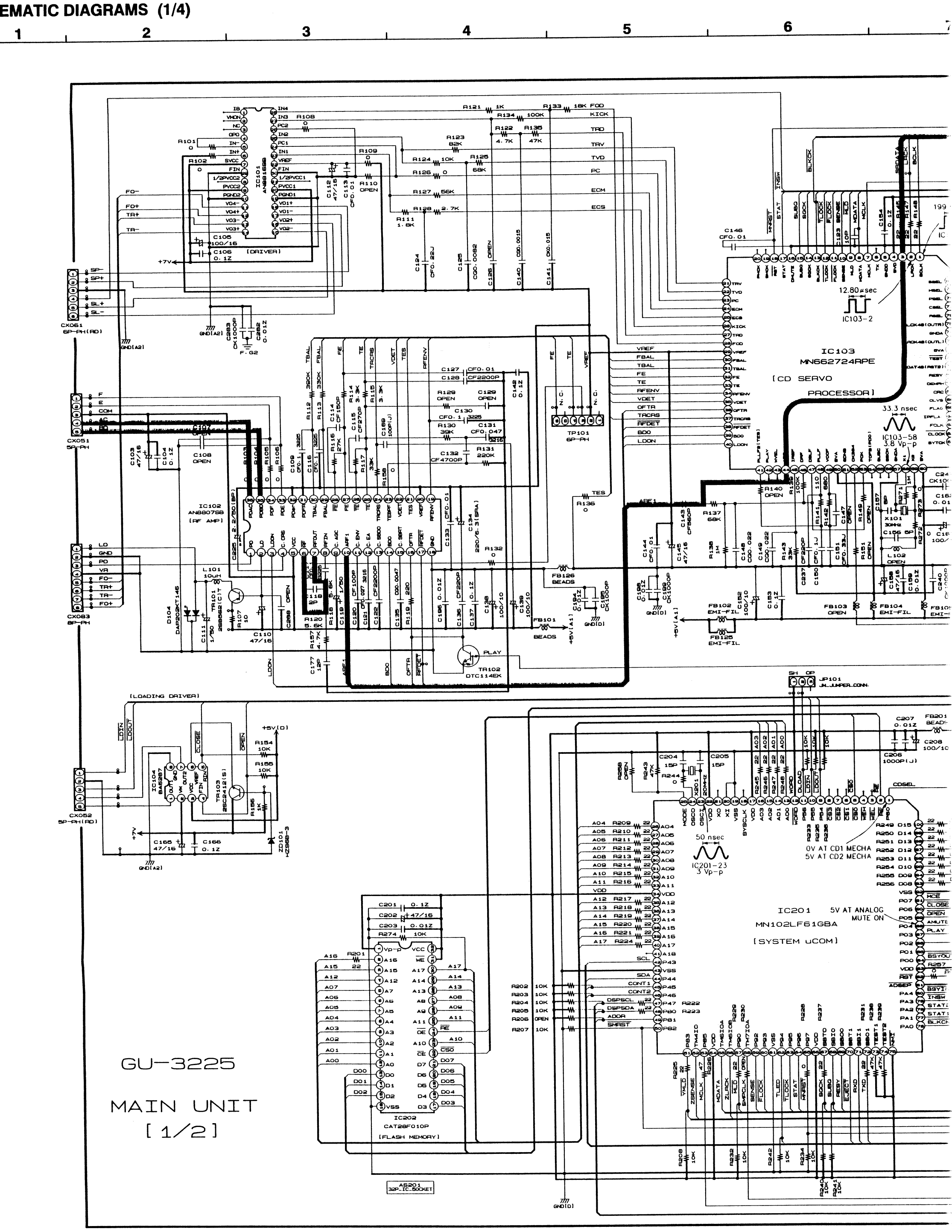

GU-3225

MAIN UNIT
[1/2]

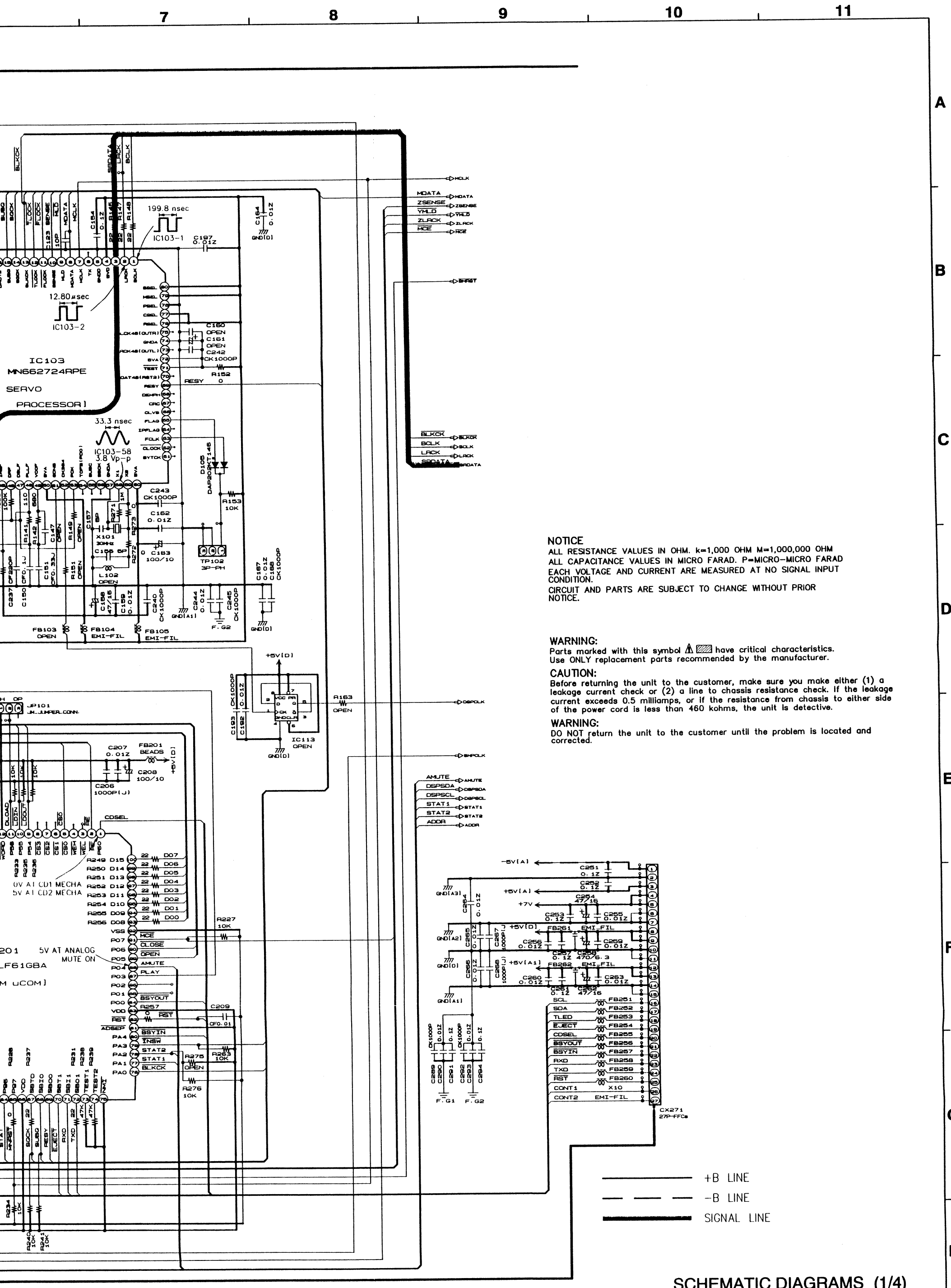

NOTICE
ALL RESISTANCE VALUES IN OHM. k=1,000 OHM M=1,000,000 OHM
ALL CAPACITANCE VALUES IN MICRO FARAD. P=MICRO-MICRO FARAD
EACH VOLTAGE AND CURRENT ARE MEASURED AT NO SIGNAL INPUT CONDITION.
CIRCUIT AND PARTS ARE SUBJECT TO CHANGE WITHOUT PRIOR NOTICE.

WARNING:
Parts marked with this symbol ⚠ ▒ have critical characteristics.
Use ONLY replacement parts recommended by the manufacturer.

CAUTION:
Before returning the unit to the customer, make sure you make either (1) a leakage current check or (2) a line to chassis resistance check. If the leakage current exceeds 0.5 milliamps, or if the resistance from chassis to either side of the power cord is less than 460 kohms, the unit is detective.

WARNING:
DO NOT return the unit to the customer until the problem is located and corrected.

SCHEMATIC DIAGRAMS (1/4)
GU-3225 MAIN UNIT (1/2)

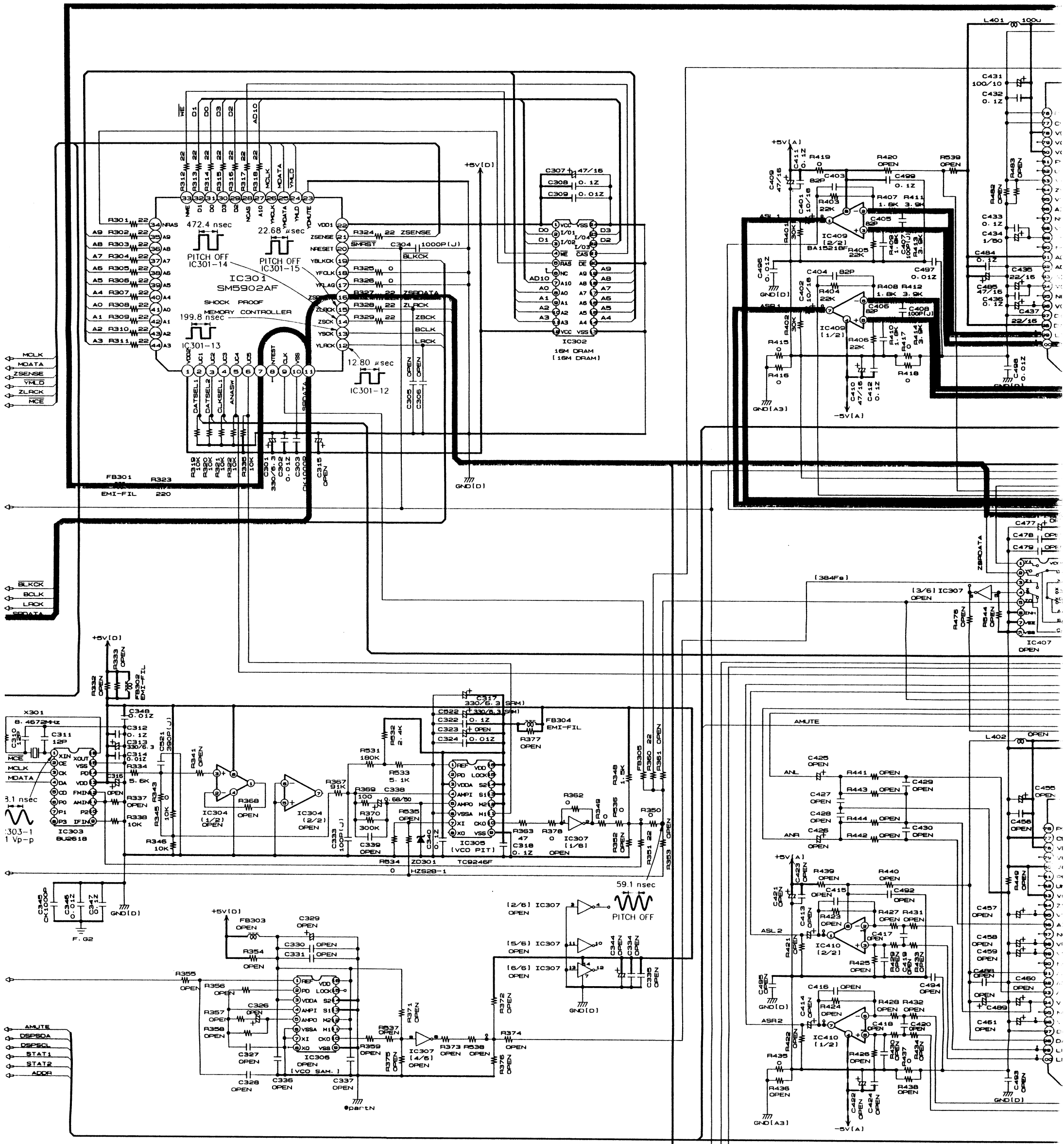
IC301
SM5902AF
SHOCK PROOF
MEMORY CONTROLLER
IC302
16M DRAM
[16M DRAM]
IC303
BU2618
IC304
(1/2)
IC304
(2/2)
IC305
[VCO PIT]
IC306
[VCO SAM.]
IC307
IC409
[2/2]
BA15218F
IC410
[2/2]
IC407
OPEN
PITCH OFF
IC301-14
PITCH OFF
IC301-15
IC301-13
IC301-12
472.4 nsec
22.68 μsec
199.8 nsec
12.80 μsec
59.1 nsec
3.1 nsec
X301
8.4672MHz
MCLK
MDATA
ZSENSE
YMLD
ZLRCK
MCE
BLKCK
BCLK
LRCK
ZSDATA
AMUTE
DSPSDA
DSPSCL
STAT1
STAT2
ADDR
+5V[D]
+5V[A]
-5V[A]
GND[D]
GND[A3]
[384Fs]
ASL1
ASR1
ASL2
ASR2
ANL
ANR
L401
L402
GU-3225
MAIN UNIT
[2/2]

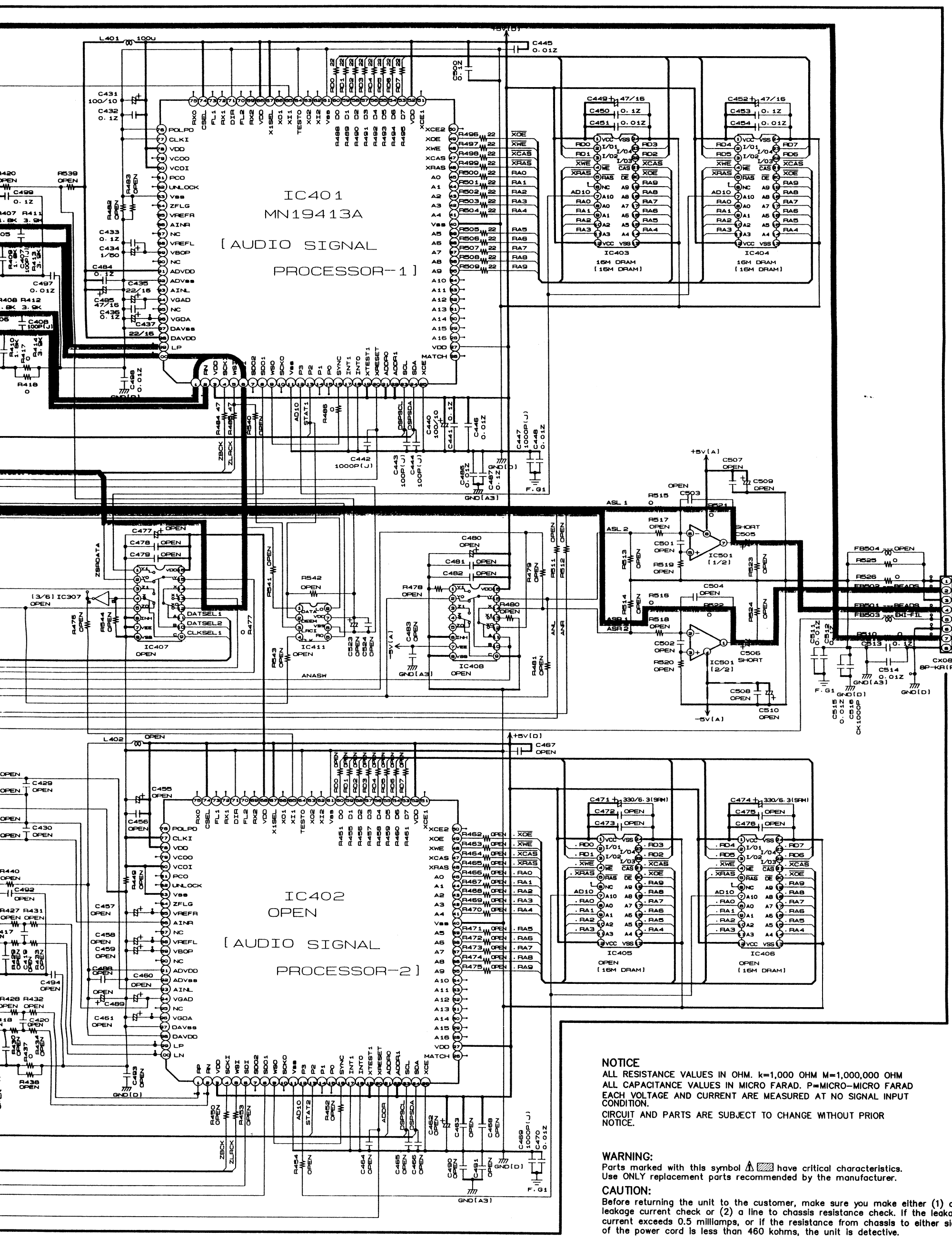

NOTICE

ALL RESISTANCE VALUES IN OHM. k=1,000 OHM M=1,000,000 OHM
ALL CAPACITANCE VALUES IN MICRO FARAD. P=MICRO-MICRO FARAD
EACH VOLTAGE AND CURRENT ARE MEASURED AT NO SIGNAL INPUT CONDITION.
CIRCUIT AND PARTS ARE SUBJECT TO CHANGE WITHOUT PRIOR NOTICE.

WARNING:
Parts marked with this symbol ⚠ ▒ have critical characteristics.
Use ONLY replacement parts recommended by the manufacturer.

CAUTION:
Before returning the unit to the customer, make sure you make either (1) a leakage current check or (2) a line to chassis resistance check. If the leakage current exceeds 0.5 milliamps, or if the resistance from chassis to either side of the power cord is less than 460 kohms, the unit is detective.

WARNING:
DO NOT return the unit to the customer until the problem is located and corrected.

SCHEMATIC DIAGRAMS (2/4)
GU-3225 MAIN UNIT (2/2)

EMATIC DIAGRAMS (3/4)

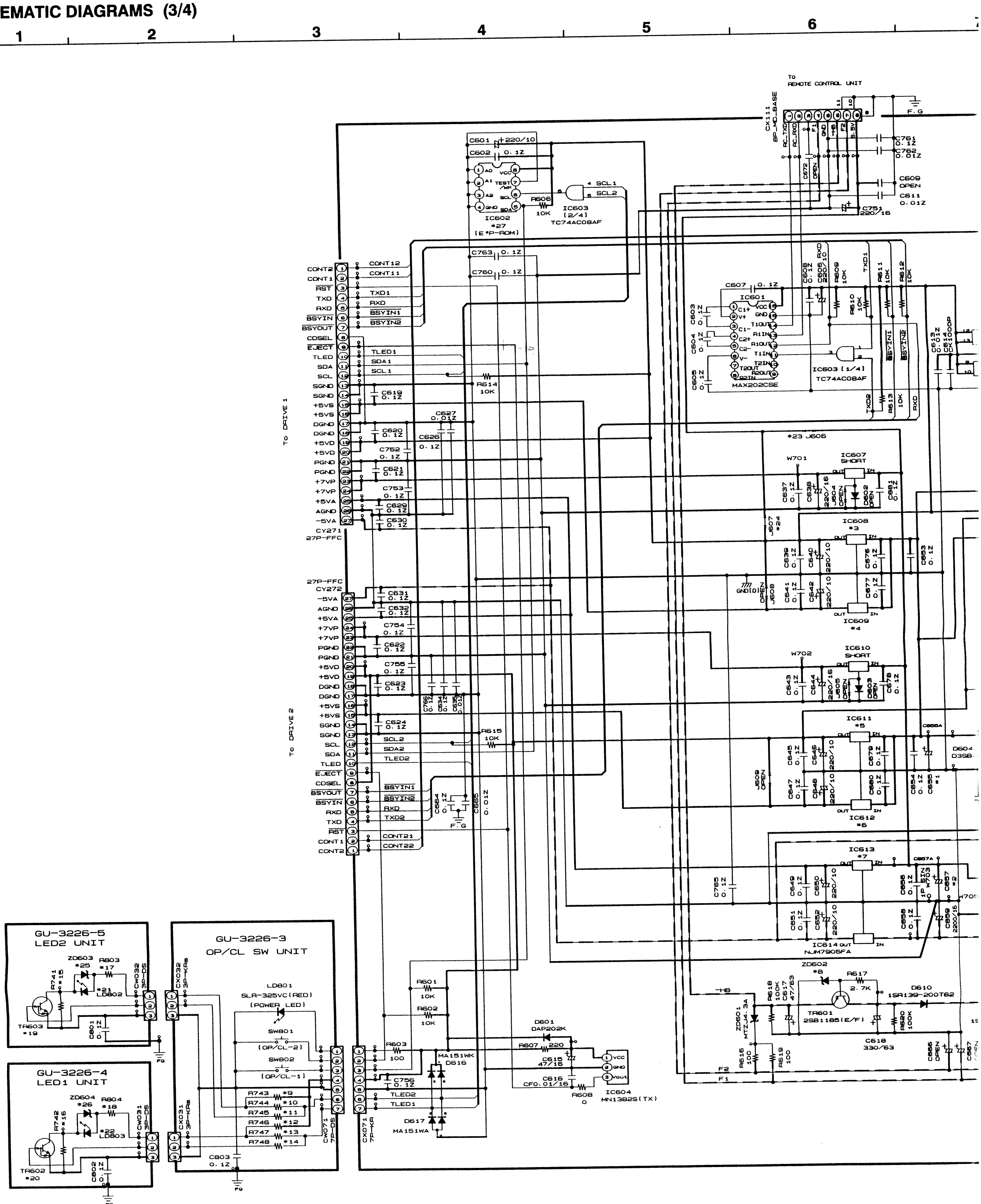

No. / MODEL	*1 C655	*2 C657	*3 IC608	*4 IC609	*5 IC611	*6 IC612	*7 IC613	*8 ZD602	*9 R743	*10 R744	*11 R745	*12 R746	*13 R747	*14 R748	*15 R741	*16 R742	*17 R803	*18 R804	*19 TR603	*20 TR602	*21 LD802	*22 LD803	*23 J606	*24 J607	*25 ZD603	*26 ZD604	*27 IC602
DN-2600F	12000/16	10000/16	UPC2405AHF					MTZJ39E	OPEN	0	OPEN	OPEN	0	OPEN	0	0	270	270	OPEN	OPEN	LNX901CFBDA		SHORT	OPEN	5.6K	5.6K	X24C00S
DN-1800F	6800/16	6800/16	NJM7805FA					MTZJ27A	0	OPEN	0	0	OPEN	0	OPEN	OPEN	110	110	DTC143EK	DTC143EK	SEL1810A		OPEN	SHORT	OPEN	OPEN	X24C00S
DN-2100F	6800/16	6800/16	NJM7805FA					MTZJ27A	0	OPEN	0	0	OPEN	0	OPEN	OPEN	110	110	DTC143EK	DTC143EK	SEL1710A		OPEN	SHORT	OPEN	OPEN	S-24C01AFJA

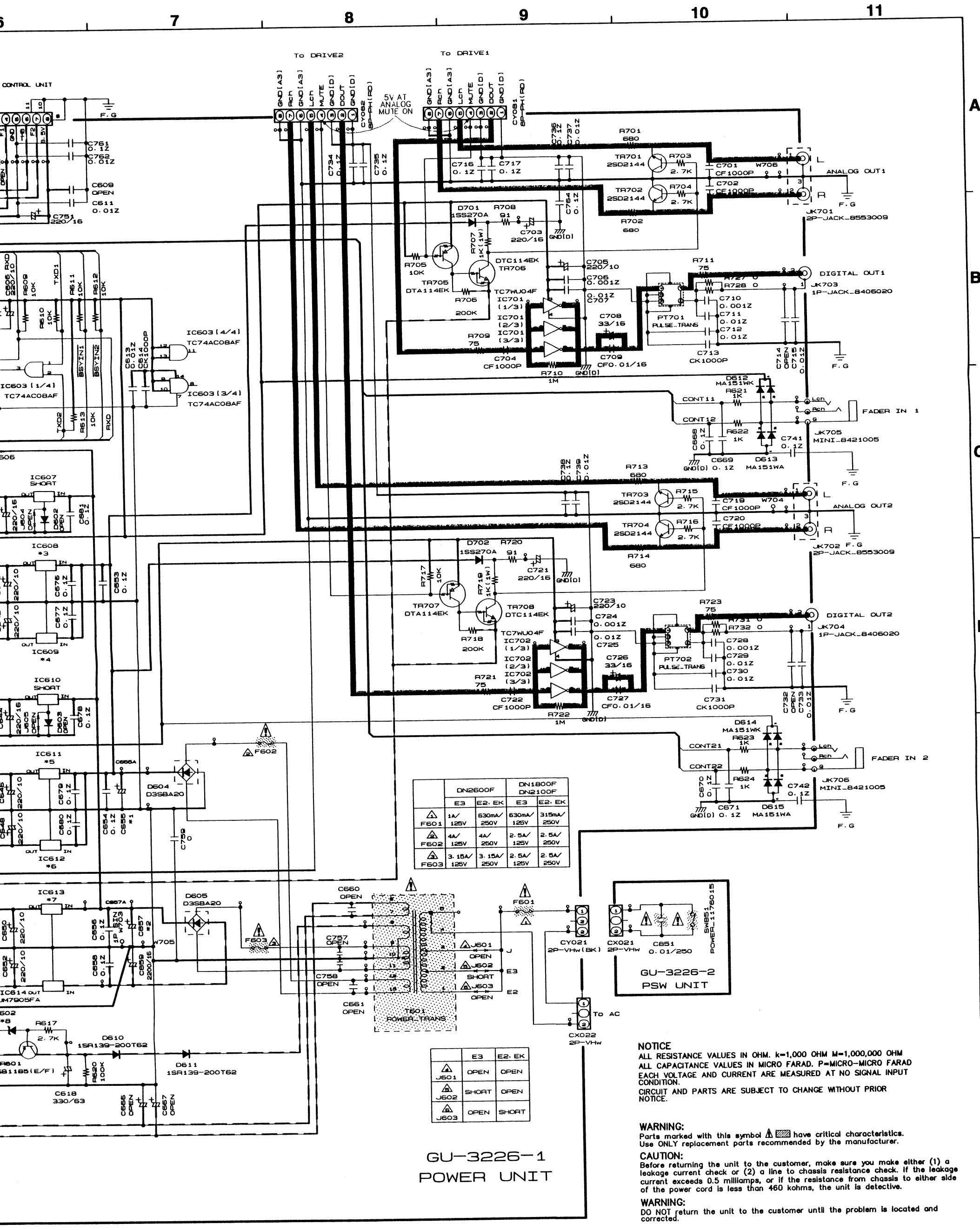

	DN2600F		DN1800F DN2100F	
	E3	E2. EK	E3	E2. EK
F601	1A/ 125V	630mA/ 250V	630mA/ 125V	315mA/ 250V
F602	4A/ 125V	4A/ 250V	2.5A/ 125V	2.5A/ 250V
F603	3.15A/ 125V	3.15A/ 250V	2.5A/ 125V	2.5A/ 250V

	E3	E2. EK
J601	OPEN	OPEN
J602	SHORT	OPEN
J603	OPEN	SHORT

NOTICE
ALL RESISTANCE VALUES IN OHM. k=1,000 OHM M=1,000,000 OHM
ALL CAPACITANCE VALUES IN MICRO FARAD. P=MICRO-MICRO FARAD
EACH VOLTAGE AND CURRENT ARE MEASURED AT NO SIGNAL INPUT CONDITION.
CIRCUIT AND PARTS ARE SUBJECT TO CHANGE WITHOUT PRIOR NOTICE.

WARNING:
Parts marked with this symbol ⚠ ▒ have critical characteristics.
Use ONLY replacement parts recommended by the manufacturer.

CAUTION:
Before returning the unit to the customer, make sure you make either (1) a leakage current check or (2) a line to chassis resistance check. If the leakage current exceeds 0.5 milliamps, or if the resistance from chassis to either side of the power cord is less than 460 kohms, the unit is detective.

WARNING:
DO NOT return the unit to the customer until the problem is located and corrected.

	*26 ZD604	*27 IC602
5.6K	5.6K	X24C00S
OPEN	OPEN	X24C00S
OPEN	OPEN	S-24C01AFJA

+B LINE
-B LINE
SIGNAL LINE

SCHEMATIC DIAGRAMS (3/4)
GU-3226 POWER UNIT

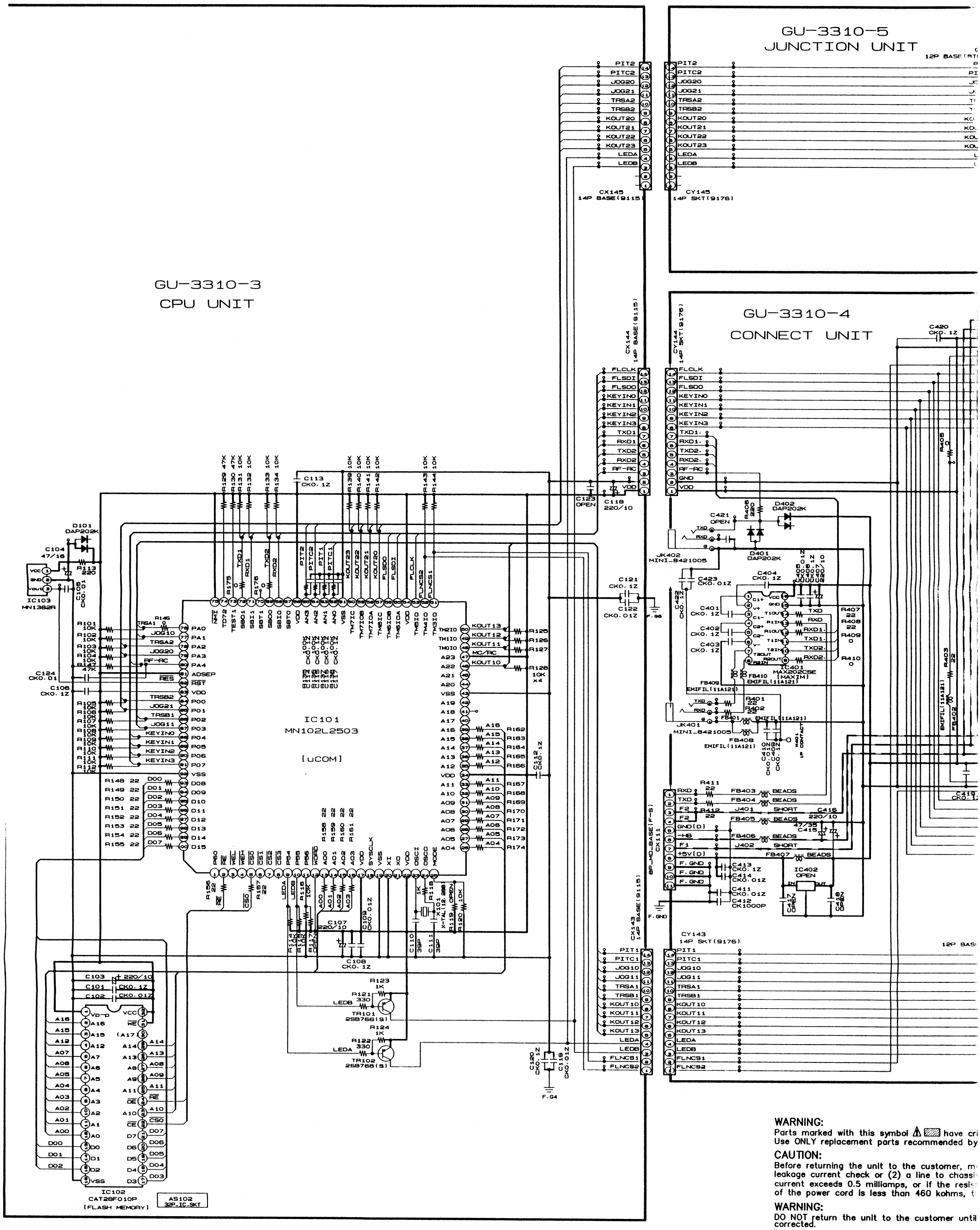

WARNING:
Parts marked with this symbol ⚠ ▨ have cri
Use ONLY replacement parts recommended by

CAUTION:
Before returning the unit to the customer, m
leakage current check or (2) a line to chassi
current exceeds 0.5 milliamps, or if the resis
of the power cord is less than 460 kohms, t

WARNING:
DO NOT return the unit to the customer until
corrected.

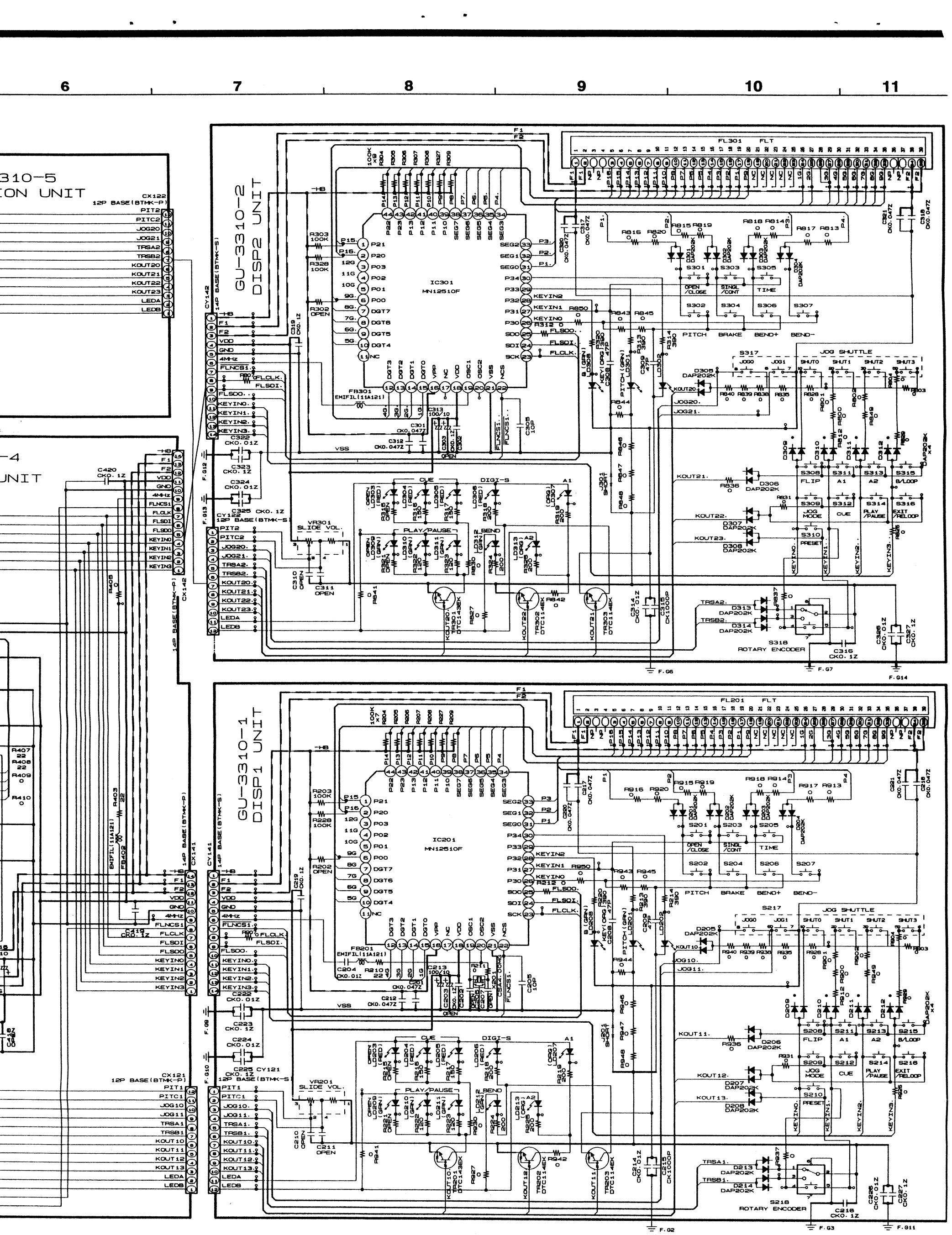

d with this symbol ⚠ ▒ have critical characteristics.
eplacement parts recommended by the manufacturer.

ning the unit to the customer, make sure you make either (1) a
ent check or (2) a line to chassis resistance check. If the leakage
eds 0.5 milliamps, or if the resistance from chassis to either side
r cord is less than 460 kohms, the unit is defective.

rn the unit to the customer until the problem is located and

NOTICE
ALL RESISTANCE VALUES IN OHM. k=1,000 OHM M=1,000,000 OHM
ALL CAPACITANCE VALUES IN MICRO FARAD. P=MICRO-MICRO FARAD
EACH VOLTAGE AND CURRENT ARE MEASURED AT NO SIGNAL INPUT CONDITION.
CIRCUIT AND PARTS ARE SUBJECT TO CHANGE WITHOUT PRIOR NOTICE.

+B LINE
-B LINE

SCHEMATIC DIAGRAMS (4/4)
GU-3310 REMOTE UNIT